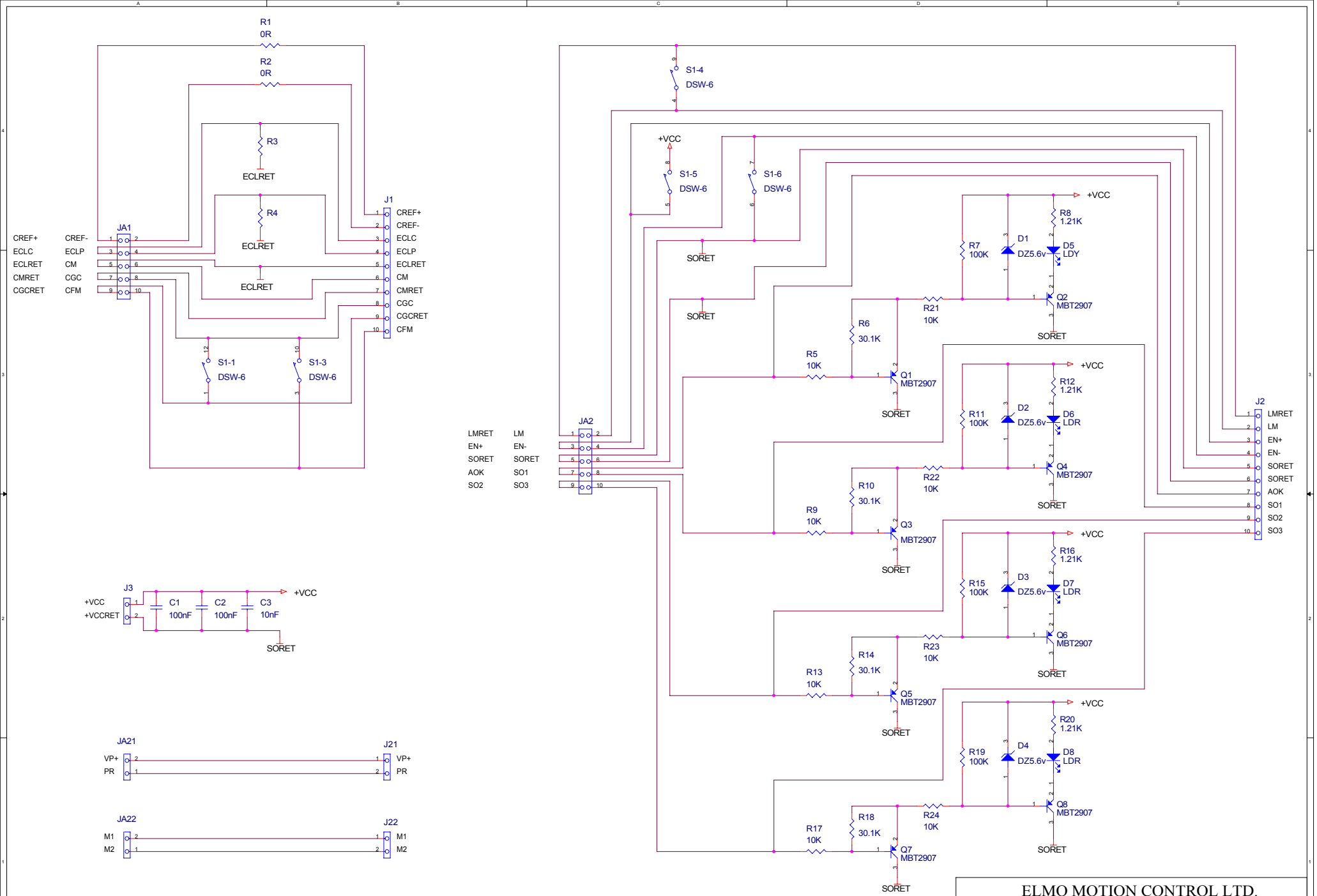

ELMO MOTION CONTROL LTD.				
Title: VIO STARTER				
Done by:	Date:	Size: A	Document No: VIO STARTER.DSN Drw: NIZ	Rev. B
App. by:	Date:	Date: Sunday, May 18, 2003		Sheet: 1 of: 1