Inspiring Motion
Since 1988

Gold Tuba
Digital Servo Drive
Installation Guide
EtherCAT and CAN

September 2021 (Ver. 1.210) www.elmomc.com

Elmo Motion Control

Notice

This guide is delivered subject to the following conditions and restrictions:

- This guide contains proprietary information belonging to Elmo Motion Control Ltd. Such information is supplied solely for the purpose of assisting users of the Gold Tuba servo drive in its installation.
- The text and graphics included in this manual are for the purpose of illustration and reference only. The specifications on which they are based are subject to change without notice.
- Information in this document is subject to change without notice.

Elmo Motion Control and the Elmo Motion Control logo are registered trademarks of Elmo Motion Control Ltd.

EtherCAT Conformance Tested. EtherCAT® is a registered trademark and patented technology, licensed by Beckhoff Automation GmbH, Germany.

Document no. MAN-G-TUBIG-EC (Ver. 1.210)
Copyright © 2021
Elmo Motion Control Ltd.
All rights reserved.

Catalog Number

G-TUB XX/YYY E R S S O Q

Gold Line

Continuous Current (Amps)

Nominal AC Operating Voltage

Network Communications:

S = Standard:

- CANopen
- USB

E = EtherCAT:

- EtherCAT or Ethernet
- USB

F = EtherCAT with switches:

- EtherCAT or Ethernet
- USB

Feedback:

E =

Port A:

- Absolute Serial Encoder
- Incremental Encoder
- Digital Hall

Port B:

- Incremental Encoder
- Analog Encoder
- Analog Hall

R =

Port A:

- Absolute Serial Encoder
- Incremental Encoder
- Digital Hall

Port B:

- Resolver

I/O Options:

S = 24 V I/O and STO High Side Logic (Source)
T = 5 V I/O and STO
H = 24 V I/O Low Side Logic (Sink) and STO High Side Logic (Source)

Network I/O Options:

S = Standard
E = Extended I/O

STO Out Options:

O = STO Out
N = Without STO Out

Dual Use:

Q — Not subjected to export control according to ECCN-3A225 (US) or 428/2009 - 3A225 (EU Dual Use) Commutation frequency limited to 599Hz

Blank - Standard. No Commutation frequency limitation

Chapter 1: This Installation Guide 7

Chapter 2: Safety Information 7

2.1. Warnings 8
2.2. Cautions 8
2.3. CE Marking Conformance 8
2.4. Warranty Information 8

Chapter 3: Product Description 9

Chapter 4: Technical Information 10

4.1. Physical Specifications 10
4.2. Technical Data 10
4.2.1. Auxiliary Supply 11
4.2.2. Product Features 11
4.2.3. Environmental Conditions 12
4.2.3.1. Gold Line 12
4.2.4. Gold Line Standards and Certifications 13
4.2.4.1. Dual Use 13

Chapter 5: Installation 14

5.1. Hardware Requirements 14
AC Input Requirements 14
Recommended Wire Cross-Sections (All Models) 14
5.2. Unpacking the Drive Components 15
5.3. Connectors Types 16
5.3.1. Mating Connector Types 18
5.4. Mounting the Gold Tuba 19

Chapter 6: Gold Tuba Connection Diagrams 20

Chapter 7: Wiring 22

7.1. Basic Recommendations 24
7.1.1. General 24
7.1.2. Feedback Cable Port A and Port B Connector 25
7.1.3. Feedback Cable Port C Connector 26
7.1.4. IO Cable Connector 26
7.1.5. STO Cable Connector 27
7.2. Motor Power Connector Pinouts 28
7.3. Main Power 30
7.3.1. Direct-to-Mains Power Source (Non-Isolated) 31
7.3.1.1. Three-Phase Direct-to-Mains Connection Topology 32
7.3.1.2. Single-Phase Direct-to-Mains Connection Topology 32

7.3.1.3. Multiple Connections Topology 33
7.3.2. Shunt Regulator 34
7.3.3. Fault Protection 34
7.4. Auxiliary Power 35
7.5. Port A 37
7.5.1. Incremental Encoder 39
7.5.2. Hall Sensor 39
7.5.3. Absolute Serial Type Encoder 40
7.6. Port B 42
7.6.1. Incremental Encoder 44
7.6.2. Interpolated Analog Encoder 45
7.6.3. Resolver 46
7.7. Port C and Analog Input 47
7.7.1. Port C 49
7.7.2. Analog Input 49
7.8. STO Connector 50
7.8.1. Source Mode PLC Voltage Level Input 51
7.8.2. TTL Mode TTL Voltage Level Input 51
7.8.3. STO Output 52
7.9. Digital Inputs and Outputs 53
7.9.1. Digital Input and Output TTL Mode 55
7.9.2. Digital Input and Output PLC Source Mode 57
7.9.3. Digital Input and Output Sink Mode 59
7.10. USB 2.0 61
7.11. Network I/O 63
7.11.1. Digital Input 65
7.11.2. Digital Output 68
7.12. Smart Fan 70
7.13. Drive Status Indicator 71
7.14. EtherCAT Communications Version 72
7.14.1. EtherCAT IN/Ethernet Pinouts 72
7.14.2. EtherCAT OUT Pinouts 74
7.14.3. EtherCAT Wiring 75
7.14.4. EtherCAT Link Indicators 75
7.14.5. EtherCAT Status Indicator 76
7.14.6. EtherCAT Switches 77
7.15. CAN Communications Version 78
7.15.1. CAN Wiring 80

Chapter 8: Gold Tuba Heat Dissipation 81

8.1. Power Dissipation 81
8.2. Heat Dissipation 81
8.2.1. Gold Tuba Thermal Data 81

8.2.2. How to Use the Charts 82

Chapter 9: Powering Up 83

9.1. Initializing the System 83

Chapter 10: Dimensions 84

Chapter 1: This Installation Guide

This installation Guide details the technical data, pinouts, and power connectivity of the Gold Tuba. For a comprehensive detailed description of the functions refer to the MAN-G-Panel Mounted Drives Hardware manual which describes Panel Mounted products.

Chapter 2: Safety Information

In order to achieve the optimum, safe operation of the Gold Tuba, it is imperative that you implement the safety procedures included in this installation guide. This information is provided to protect you and to keep your work area safe when operating the Gold Tuba and accompanying equipment.

Please read this chapter carefully before you begin the installation process.

Before you start, ensure that all system components are connected to earth ground. Electrical safety is provided through a low-resistance earth connection.

Only qualified personnel may install, adjust, maintain and repair the servo drive. A qualified person has the knowledge and authorization to perform tasks such as transporting, assembling, installing, commissioning and operating motors.

The Gold Tuba contains electrostatic-sensitive components that can be damaged if handled incorrectly. To prevent any electrostatic damage, avoid contact with highly insulating materials, such as plastic film and synthetic fabrics. Place the product on a conductive surface and ground yourself in order to discharge any possible static electricity build-up.

To avoid any potential hazards that may cause severe personal injury or damage to the product during operation, keep all covers and cabinet doors shut.

The following safety symbols are used in this and all Elmo Motion Control manuals:

Warning:
This information is needed to avoid a safety hazard, which might cause bodily injury or death as a result of incorrect operation.

Caution:
This information is necessary to prevent bodily injury, damage to the product or to other equipment.

Important:
Identifies information that is critical for successful application and understanding of the product.

2.1. Warnings

- To avoid electric arcing and hazards to personnel and electrical contacts, never connect/disconnect the servo drive while the power source is on.
- Power cables can carry a high voltage, even when the motor is not in motion. Disconnect the Gold Tuba from all voltage sources before servicing.
- The high voltage products within the Gold Line range contain grounding conduits for electric current protection. Any disruption to these conduits may cause the instrument to become hot (live) and dangerous.
- After shutting off the power and removing the power source from your equipment, **wait at least 4 minutes when using a 480 type drive, or 7 minutes when using a 230 type drive**, before touching or disconnecting parts of the equipment that are normally loaded with electrical charges (such as capacitors or contacts). Measuring the electrical contact points with a meter, before touching the equipment, is recommended.

2.2. Cautions

- The maximum AC power supply connected to the instrument must comply with the parameters outlined in this guide.
- When connecting the Gold Tuba to an approved isolated auxiliary power supply, connect it through a line that is separated from hazardous live voltages using reinforced or double insulation in accordance with approved safety standards.
- Before switching on the Gold Tuba, verify that all safety precautions have been observed and that the installation procedures in this manual have been followed.
- Make sure that the Safe Torque Off is operational

2.3. CE Marking Conformance

The Gold Tuba is intended for incorporation in a machine or end product. The actual end product must comply with all safety aspects of the relevant requirements of the European Safety of Machinery Directive 2006/42/EC as amended, and with those of the most recent versions of standards EN 60204-1 and EN ISO 12100 at the least, and in accordance with 2006/95/EC.

Concerning electrical equipment designed for use within certain voltage limits, the Gold Tuba meets the provisions outlined in 2006/95/EC. The party responsible for ensuring that the equipment meets the limits required by EMC regulations is the manufacturer of the end product.

2.4. Warranty Information

The products covered in this manual are warranted to be free of defects in material and workmanship and conform to the specifications stated either within this document or in the product catalog description. All Elmo drives are warranted for a period of 12 months from the date of shipment. No other warranties, expressed or implied — and including a warranty of merchantability and fitness for a particular purpose — extend beyond this warranty.

Chapter 3: Product Description

The Gold Tuba series of digital servo drives are highly resilient and designed to deliver the highest density of power and intelligence. The Gold Tuba delivers up to **28 kW of continuous power** in a compact package.

Before you start, ensure that all system components are connected to earth ground. Electrical safety is provided through a low-resistance earth connection.

Only qualified personnel may install, adjust, maintain and repair the servo drive. A qualified person has the knowledge and authorization to perform tasks such as transporting, assembling, installing, commissioning and operating motor servo drives.

The Gold Tuba servo drive contains electrostatic-sensitive components that can be damaged if handled incorrectly. To prevent any electrostatic damage, avoid contact with highly insulating materials, such as plastic film and synthetic fabrics. Place the product on a conductive surface and ground yourself in order to discharge any possible static electricity build-up.

To avoid any potential hazards that may cause severe personal injury or damage to the product during operation, keep all covers and cabinet doors shut.

The Gold Tuba series are part of Elmo's advanced Gold Line. They operate from an AC power source in current, velocity, position and advanced position modes, in conjunction with a permanent-magnet synchronous brushless motor, DC brush motor, linear motor or voice coil. They are designed for use with any type of sinusoidal and trapezoidal commutation, with vector control. The Gold Tuba can operate as a stand-alone device or as part of a multi-axis system in a distributed configuration on a real-time network.

Power to the drives is provided by an AC power source, either directly from the mains or via a transformer.

An auxiliary 24 VDC power supply is required as the Gold Tuba does not operate without one. This feature also serves as a backup functionality.

Chapter 4: Technical Information

4.1. Physical Specifications

Feature	Units	All Types
Weight	g (oz)	3.25 Kg (114.64 oz)
Dimension	mm (in)	241 x 86.1 x 180.1 (9.45" x 3.39" x 7.09")
Mounting method		Wall Mounted

4.2. Technical Data

Feature	Units	30/230	40/230	30/480	40/480	45/480
Minimum supply voltage	**VAC** **DC-500 Hz**	1 x 60 or 3 x 60	3 x 60	3 x 140		
Nominal supply voltage	**VAC** **DC-500 Hz**	1 x 230 or 3 x 230	3 x 230	3 x 400 3x 480		
Maximum supply voltage	**VAC** **DC-500 Hz**	1 x 270 or 3 x 270	3 x 270	3 x 528		
Maximum continuous power output	**kW**	9.5	13	18.5	25	28
Efficiency at rated power (at nominal conditions)	**%**	> 98				
Auxiliary supply voltage range	**VDC**	24 VDC ±10%				
Auxiliary supply power	**VA**	20	35	20	35	
Continuous current limit (Ic) Amplitude sinusoidal/DC trapezoidal commutation	**A**	30	40	30	40	45
Continuous RMS sinusoidal commutation current limit (Ic)	**A**	21	28	21	28	32
Peak Current	**A**	60	80	60	80	90
Built In Shunt (peak Power)	**kW**	5.9		11		

Note on current ratings: The current ratings of the Gold Tuba are given in units of DC amperes (ratings that are used for trapezoidal commutation or DC motors). The RMS (sinusoidal commutation) value is the DC value divided by 1.41.

4.2.1. Auxiliary Supply

Feature	Details
Auxiliary power supply	*Isolated DC source only*
Auxiliary supply input voltage	24 VDC ±10%
Auxiliary supply + Fan input power	For 30A Models: 20 VA For 40/45A Models: 35 VA

4.2.2. Product Features

Main Feature	Details	Presence and No.
STO	TTL *or*	**√**
	PLC Source	**√**
Digital Input Option	TTL *or*	**6**
	PLC Source *or*	**6**
	PLC Sink	**6**
Digital Output Option	TTL *or*	**4**
	PLC Source *or*	**4**
	PLC Sink	**4**
Analog Input	Differential ±10V analog input	**1**
Feedback	Standard Port A, B, & C	**√**
Communication Option	USB	**√**
	EtherCAT without switches *or*	**√**
	EtherCAT with switches *or*	**√**
	CAN	**√**
IO Network Option	Digital Input (type according to the P/N)	**12**
	Digital Output (type according to the P/N)	**6**
	Differential ±10V Analog input(type according to the P/N)	**1**
Other	STO Output Status	**√**

4.2.3. Environmental Conditions

You can guarantee the safe operation of the Gold Tuba by ensuring that it is installed in an appropriate environment.

4.2.3.1. Gold Line

Feature	Details
Operating ambient temperature according to IEC60068-2-2	0 °C to 40 °C (32 °F to 104 °F)
Storage temperature	-20 °C to +85 °C (-4 °F to +185 °F)
Maximum non-condensing humidity according to IEC60068-2-78	95%
Maximum Operating Altitude	2,000 m (6562 feet) It should be noted that servo drives capable of higher operating altitudes are available on request.
Mechanical Shock according to IEC60068-2-27	15g / 11ms Half Sine
Vibration according to IEC60068-2-6	5 Hz ≤ f ≤ 10 Hz: ±10mm 10 Hz ≤ f ≤ 57 Hz: 4G 57 Hz ≤ f ≤ 500 Hz:5G

4.2.4. Gold Line Standards and Certifications

The following table describes the Main Standards of the Gold Tuba servo drive. For further details refer to the MAN-G-Panel Mounted Drives Hardware manual.

Main Standards	Item
The related standards below apply to the performance of the servo drives as stated in the environmental conditions in section 4.2.3.1 Gold Line above.	
STO IEC 61800-5-2:2007 SIL 3	Adjustable speed electrical power drive systems – Safety requirements – Functional
EN ISO 13849-1:2008 PL e, Cat 3	Safety of machinery — Safety-related parts of control systems.
Approved IEC/EN 61800-5-1	Adjustable speed electrical power drive systems Safety requirements – Electrical, thermal and energy
Recognized UL61800-5-1	Adjustable speed electrical power drive systems Safety requirements – Electrical, thermal and energy
In compliance with UL 508C	Power Conversion Equipment
In compliance with UL 840	Insulation Coordination Including Clearances and Creepage Distances for Electrical Equipment
Conformity with CE 2006/95/EC	Low-voltage directive 2006/95/EC
Recognized CSA C22.2 NO. 14-13	Industrial Control Equipment

4.2.4.1. Dual Use

No export license is required for the Gold Line products signified with the suffix Q in the Part Number.

The operating frequency of the Gold Line products is “factory limited” to ≤ 599 Hz, and therefore complies with the EU Dual Use Regulation 428/2009, 3A225, and the US Dual Use regulation EAR ECCN# 3A225.

This statement applies to all identical specimens and will become invalid if a change is made in the firmware.

Chapter 5: Installation

The Gold Tuba must be installed in a suitable environment and properly connected to its voltage supplies and the motor.

5.1. Hardware Requirements

AC Input Requirements

Circuit Breakers & Contacts	Three-Phase Supply Voltage
Circuit breaker current rating	40 A Type C
Circuit breaker voltage rating	250 VAC / 480 VAC depending upon operating AC voltage
Contactor	40 A

Recommended Wire Cross-Sections (All Models)

Feature	Connection	Details	
		Recommended Maximum Wire Gauge	
		30 A Model	40/45 A Model
AC input	AC1, AC2, AC3	14 AWG	12 AWG
Protective Earth	PE	14 AWG	12 AWG

Note: The actual size is determined by the drive's current model.

5.2. Unpacking the Drive Components

Before you begin working with the Gold Tuba, verify that you have all of its components, as follows:

- The Gold Tuba servo drive
- The Elmo Application Studio (EAS) software and software manual

The Gold Tuba is shipped in a cardboard box with Styrofoam protection.

To unpack the Gold Tuba:

1. Carefully remove the servo drive from the box and the Styrofoam.
2. Check the drive to ensure that there is no visible damage to the instrument. If any damage has occurred, report it immediately to the carrier that delivered your drive.
3. To ensure that the Gold Tuba you have unpacked is the appropriate type for your requirements, locate the part number sticker on the side of the Gold Tuba. It looks like this:

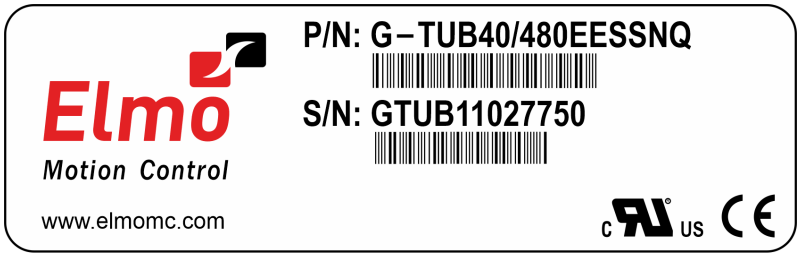

4. Verify that the Gold Tuba type is the one that you ordered, and ensure that the voltage meets your specific requirements.
   The part number at the top provides the type designation. Refer to the appropriate part number in the section at the beginning of the installation guide.

5.3. Connectors Types

The Gold Tuba has the following connector types:

Type	Pins	Function	Port
Front Connectors			
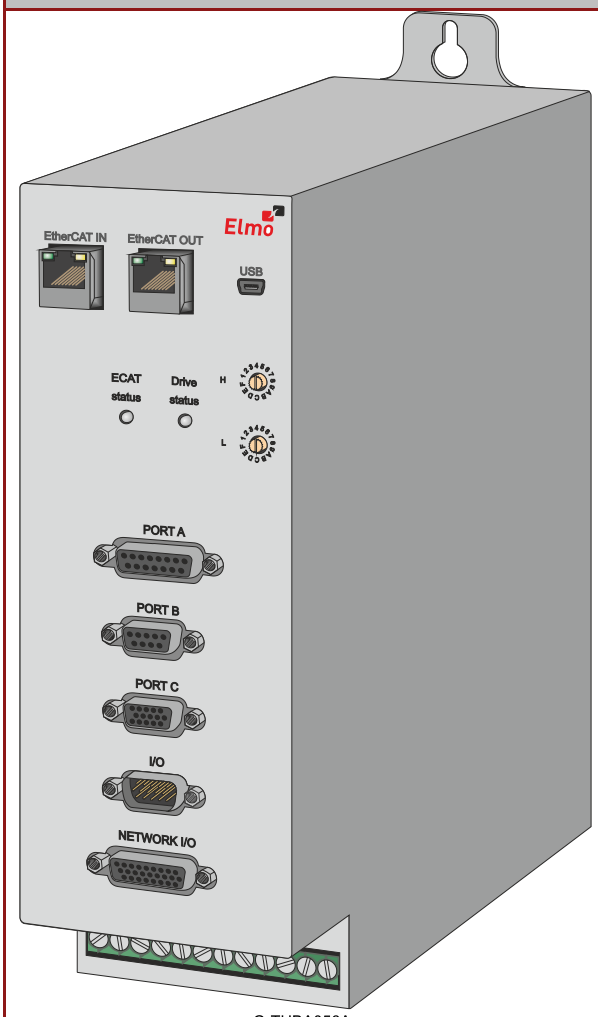 **Gold Tuba – EtherCAT Model**		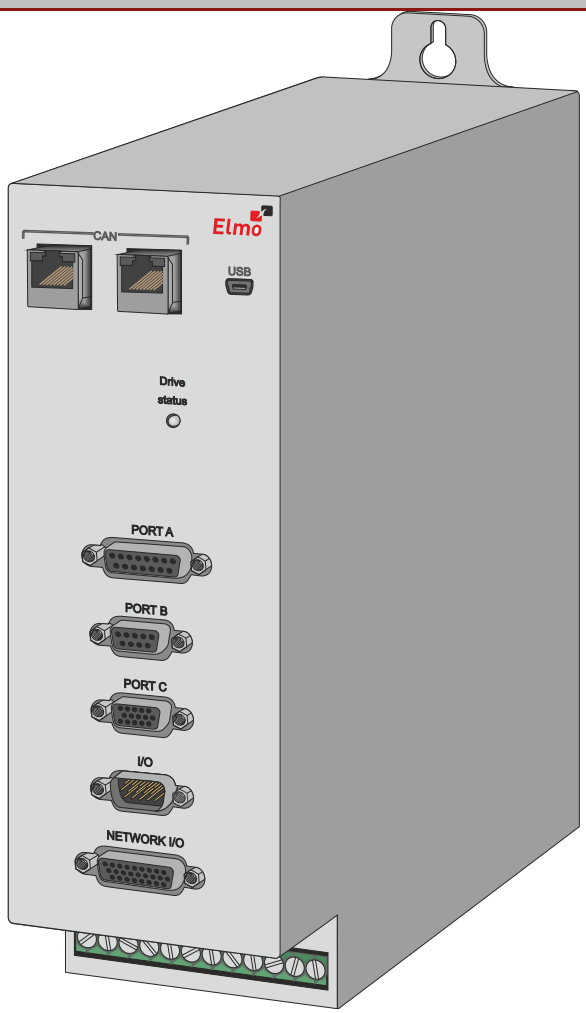 **Gold Tuba – CAN Model**	
USB	4	USB communication	USB port
Socket D-Type	15	Feedback	Port A
Socket D-Type	9	Feedback	Port B
Socket High Density D-Type	15	Feedback Output and Analog Input	Port C
Pin High Density D-Type	15	Digital Input/Digital Output	I/O
Socket High Density D-Type	26	Digital Input/ Digital Output, Analog Input	Network I/O
		EtherCAT Module	**CAN Module**
RJ-45	8	Ethernet/ EtherCAT IN communication	CAN communication
RJ-45	8	EtherCAT OUT communication	CAN communication

Type	Pins	Function	Port
Side Connectors			
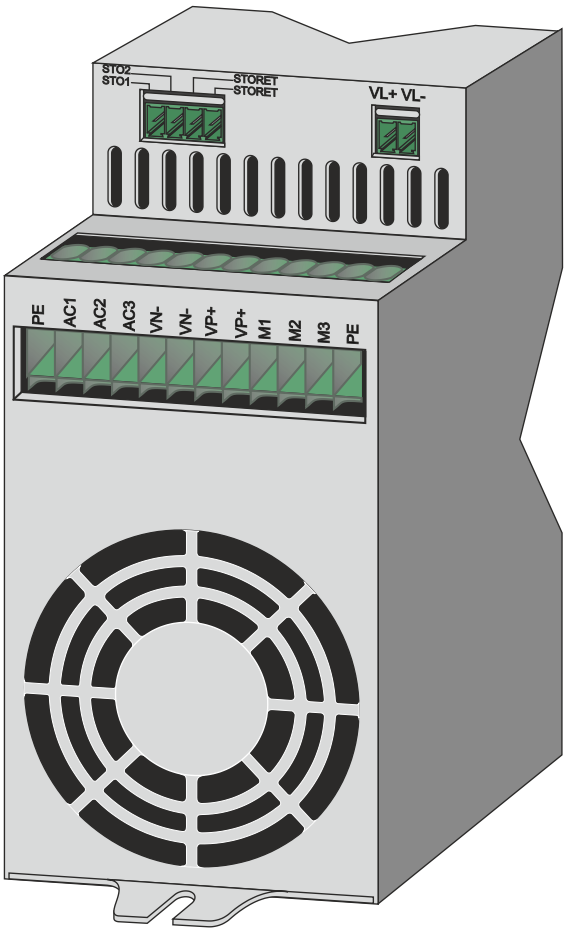 G-TUBA057A			
6.35 mm pitch	2	Protective Earth	PE
	1	Mains AC Input Phase 1	AC1
	1	Mains AC Input Phase 2	AC2
	1	Mains AC Input Phase 3	AC3
	2	Negative DC power output	VN-
	2	Positive DC power output	VP+
	1	Motor power output 1	M1
	1	Motor power output 2	M2
	1	Motor power output 3	M3
3.81 mm pitch	1	Safe Torque Off Signal Input 1	STO1
	1	Safe Torque Off Signal Input 2	STO2
	2	STO Signal Return	STORET
3.81 mm pitch	1	+24 V Auxiliary Supply Input Positive	VL+
	1	24 V RET Auxiliary Supply Input Return	VL-

5.3.1. Mating Connector Types

Mating Pin Connector	Function	Manufacturing P/N (Pheonix)
2 Pin	VL	MC 1,5/2-ST-3,81
4 Pin	STO	MC 1,5/4-ST-3,81

5.4. Mounting the Gold Tuba

For optimum heat dissipation, the Gold Tuba should be installed with the heat sink attached to the machine's chassis. It is recommended to mount the Gold Tuba in the vertical position.

M6 round head screws, one through each opening in the heat sink, are used to mount the Gold Tuba (see the diagram below).

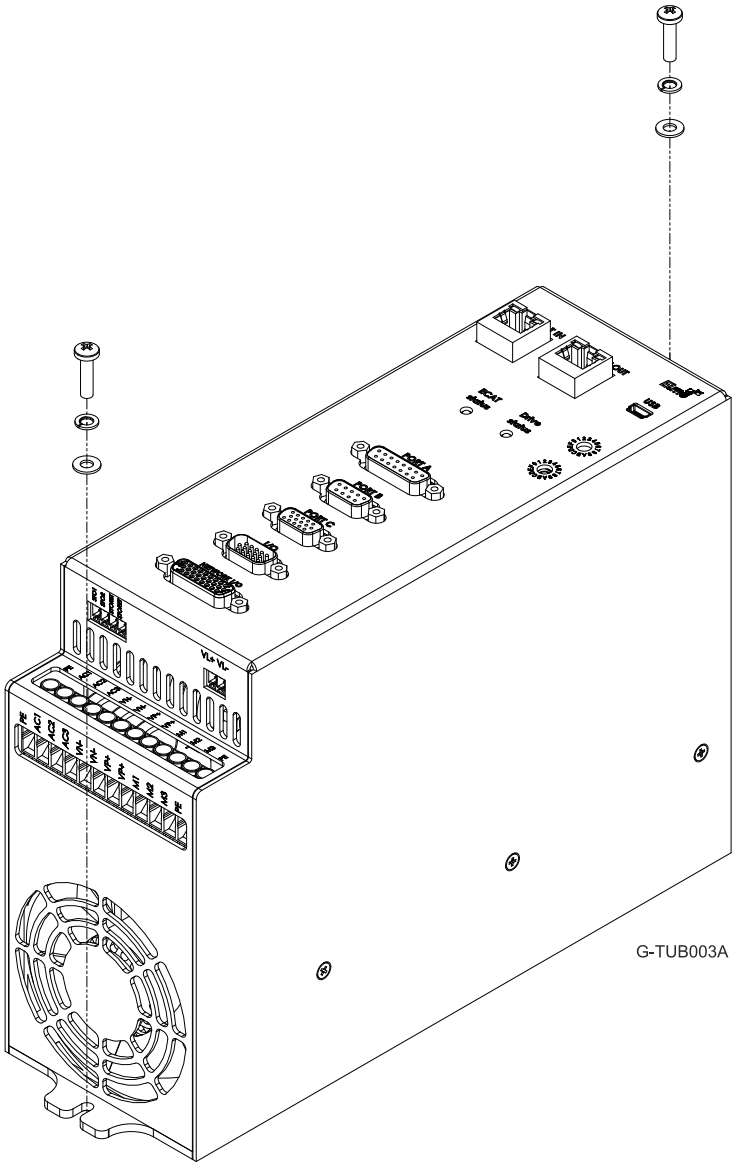

Figure 1: Mounting the Gold Tuba

Chapter 6: Gold Tuba Connection Diagrams

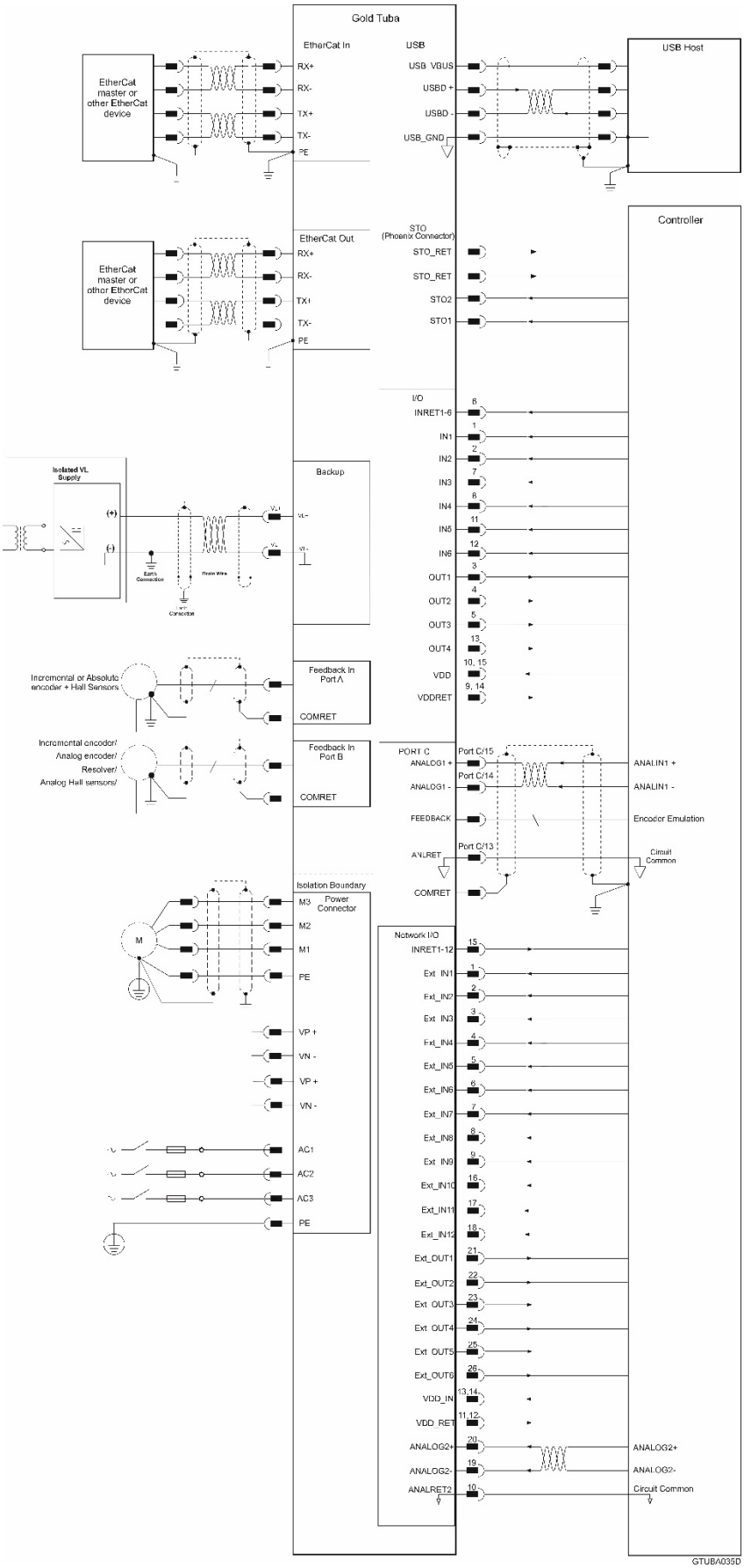

Figure 2: Gold Tuba Connection Diagram for EtherCAT

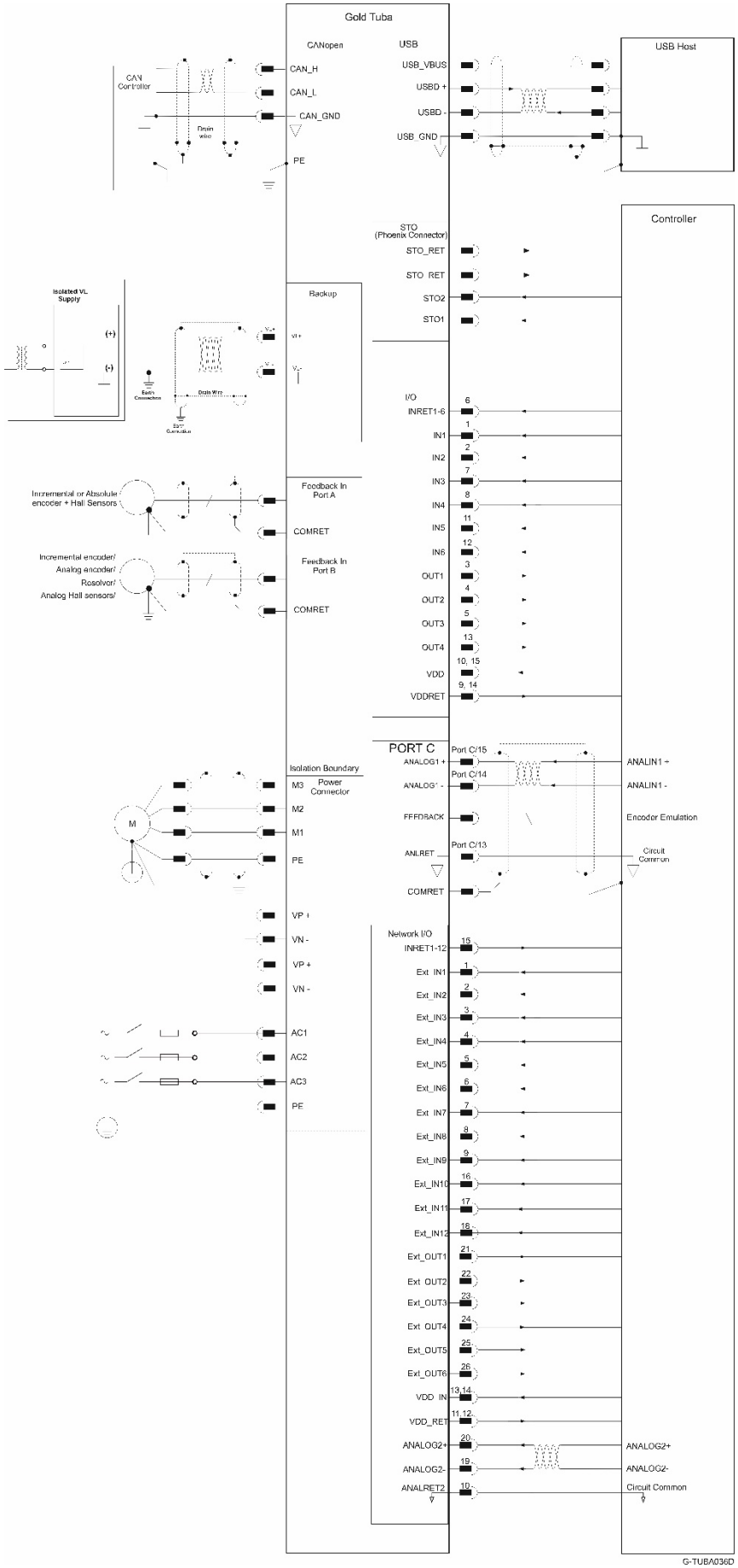

Figure 3: Gold Tuba Connection Diagram for CAN

Chapter 7: Wiring

Once the product is mounted, you are ready to wire the device. Proper wiring, grounding and shielding are essential for ensuring safe, immune and optimal servo performance of the drive.

The following table legend describes the wiring symbols detailed in all installation guides.

Wiring Symbol	Description
GGEN_101D-A	Earth connection (PE)
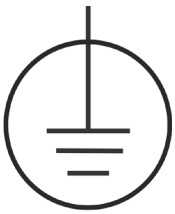 GGEN_101D-B	Earth Connection
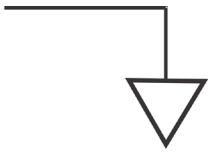 GGEN_101D-C	Common at the Controller
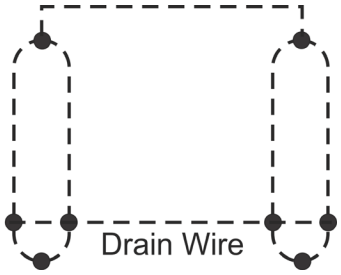 GGEN_101D-D	Shielded cable with drain wire. The drain wire is a non-insulated wire that is in direct contact with the braid (shielding). Shielded cable with drain wire significantly simplifies the wiring and earthing.
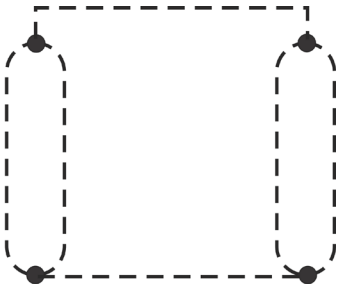 GGEN_101D-E	Shielded cable braid only, without drain wire.
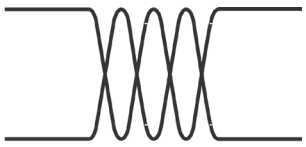 GGEN_101D-F	Twisted-pair wires
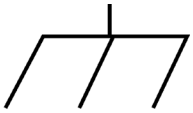 GGEN_101D-K	Analog Ground

Wiring Symbol	Description
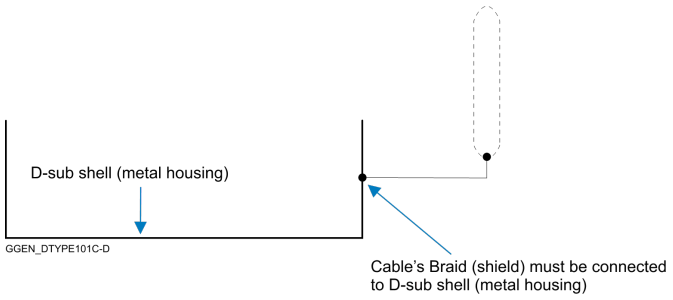	D-type Connector: The cable`s braid (Shield) must be connected to the D-sub shell (metal housing)
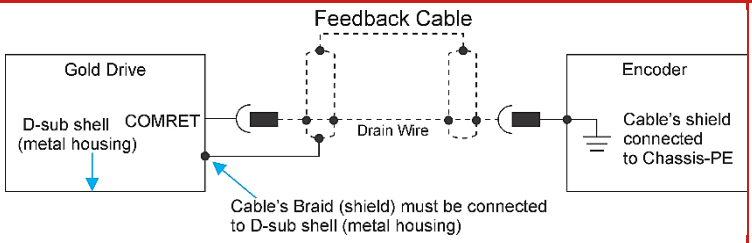	Encoder Earthing. The cable`s shield is connected to the chassis (PE) in the connector. Earthing the Encoder and connecting the Earth (PE) to the drive COMRET is mandatory to insure reliable operation, high noise immunity and rejection of voltage common mode interferences.

7.1. Basic Recommendations

7.1.1. General

1. Use shielded cables. For best results, the cable should have an aluminum foil shield covered by copper braid, and should contain a drain wire.
   Use 24, 26 or 28 AWG twisted-pair shielded with drain wire cables.
2. Keep the cable as short as possible.
   Do not mount the power cables of the motor and power bus in the proximity of the control and feedback cables.
3. Ensure that in normal operating conditions, the “earth connection” wires and shield of the control cables *carry no current.* The only time these conductors carry current is under abnormal conditions, when electrical equipment has become a potential shock or fire hazard while conducting external EMI interferences directly to ground, in order to prevent them from affecting the drive. Failing to meet this requirement might result in drive/controller/host failure.
4. After completing the wiring, carefully inspect all wires to ensure tightness, good solder of joints and general safety.

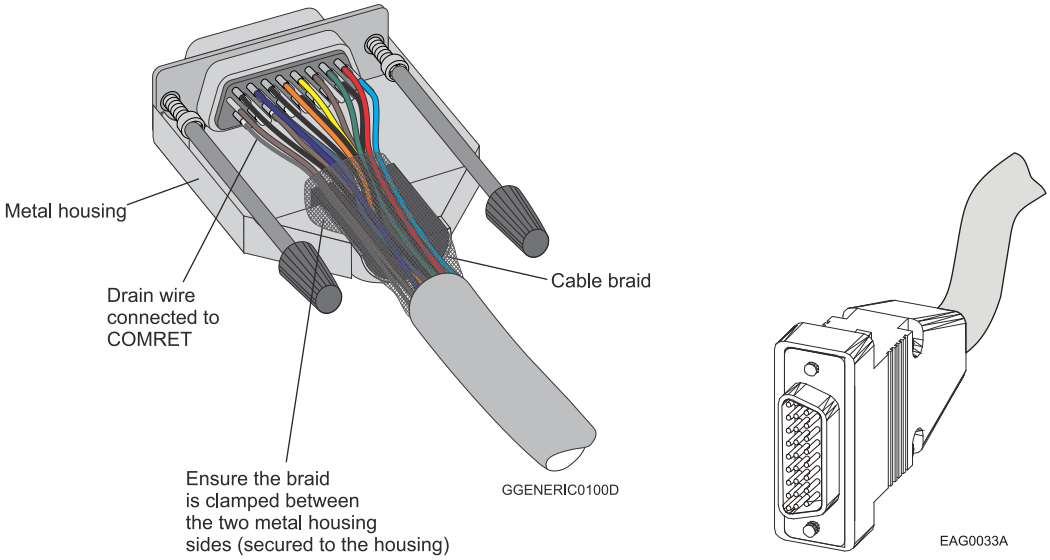

Figure 4: D-Type Cable Assemblies

5. Use only a D-Sub connector with a **metal housing** (Figure 4).
6. Make sure the braid shield is in tight contact with the metal housing of the D-type connector (Figure 4).

7.1.2. Feedback Cable Port A and Port B Connector

1. On the motor side connections, ground the shield to the motor chassis.
2. At least One COMRET (Common Return) must be connected to the PE.

   Implement the following steps to connect the COMRET to the PE:

   a. At the drive, connect the feedback drain wire to one of the COMRET terminals in the D-Type feedback connector (Figure 5).

   b. At the motor, connect the feedback cable drain wire to the GND motor chassis terminal of the feedback connector.

   The drawings below display two earth connections.

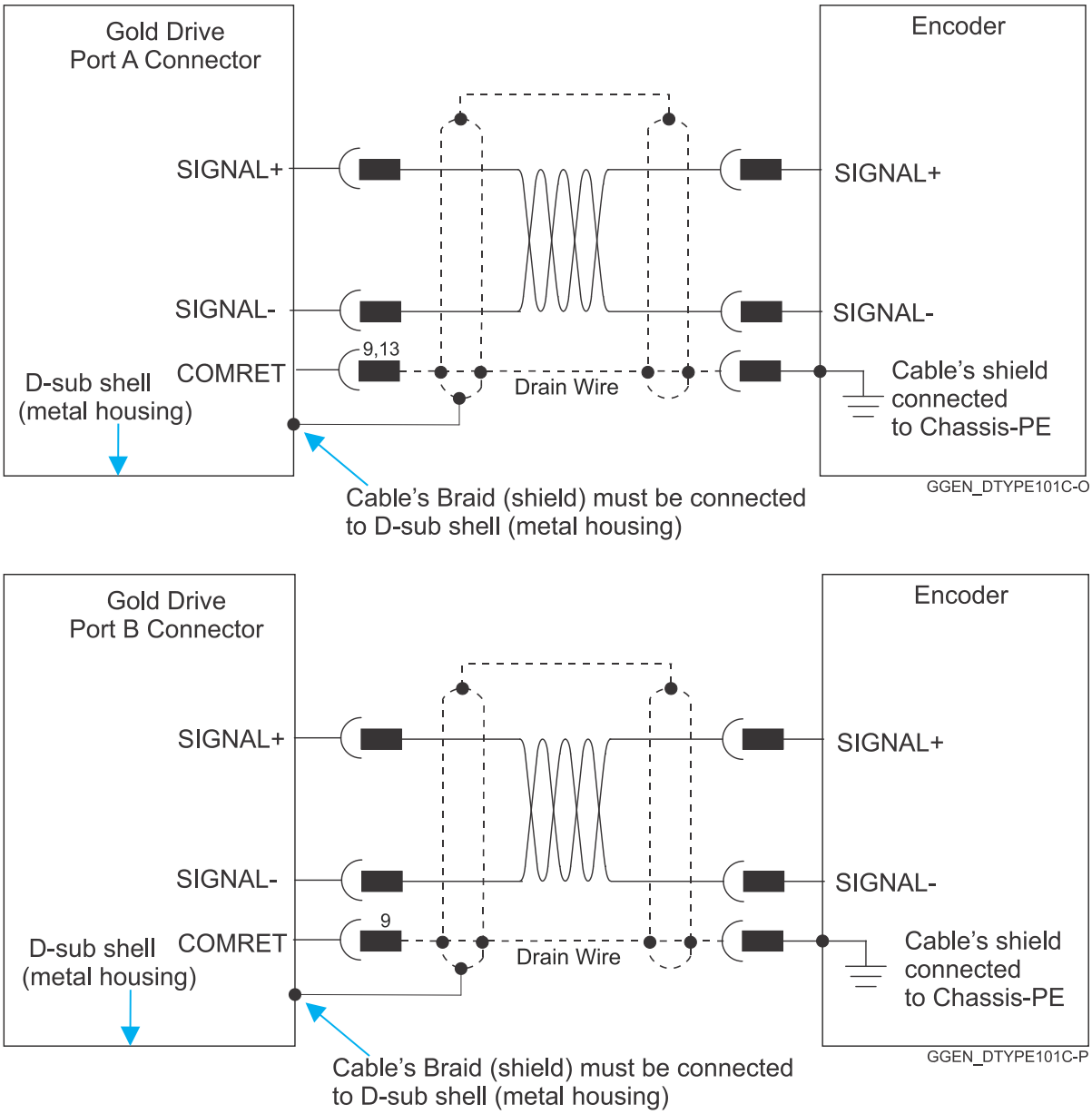

Figure 5: Feedback Port A and B Cable Assemblies

7.1.3. Feedback Cable Port C Connector

1. At the controller side connections, follow the controller manufacturer's recommendations concerning the shield.
2. The connection of the Drain wire to the Port C is not mandatory.

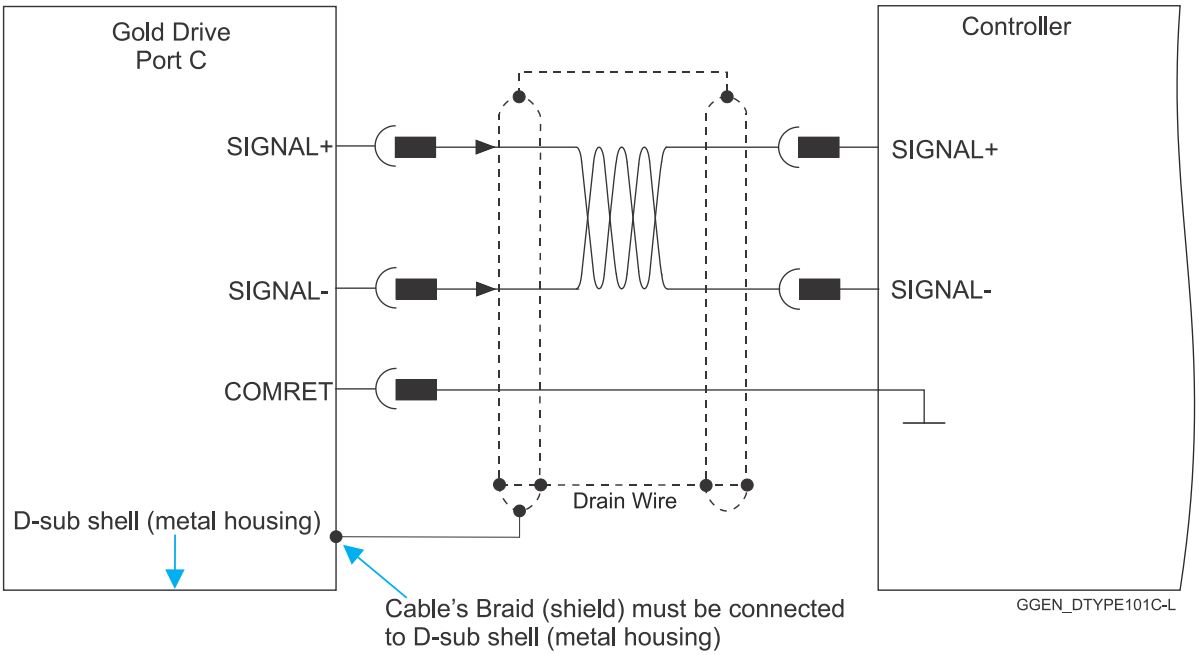

Figure 6: Feedback Port C Cable Assemblies

7.1.4. IO Cable Connector

It is recommended to use shielded cable, but is not mandatory.

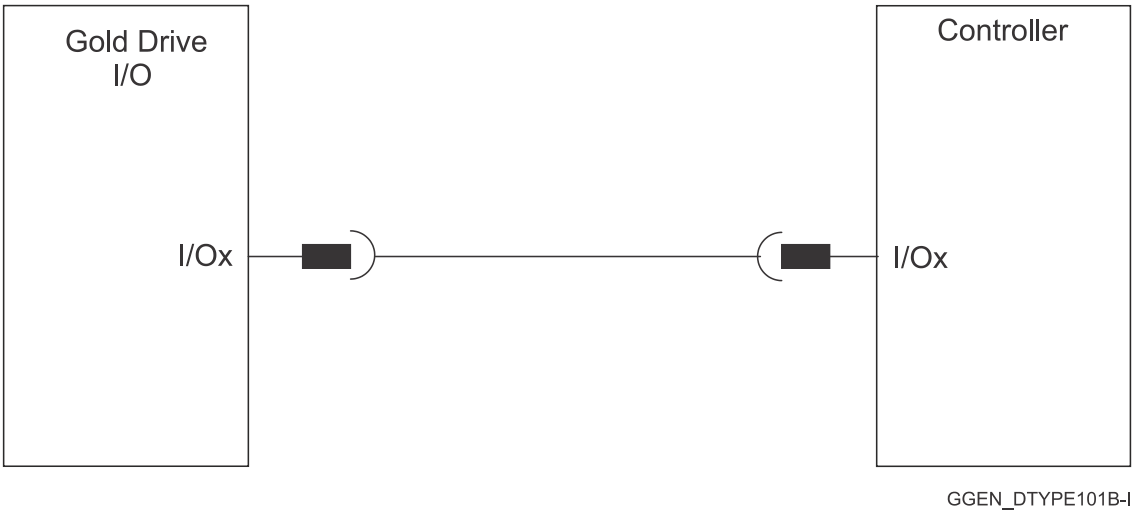

Figure 7: Feedback IO Cable Assemblies

7.1.5. STO Cable Connector

It is recommended to use shielded cable, but is not mandatory.

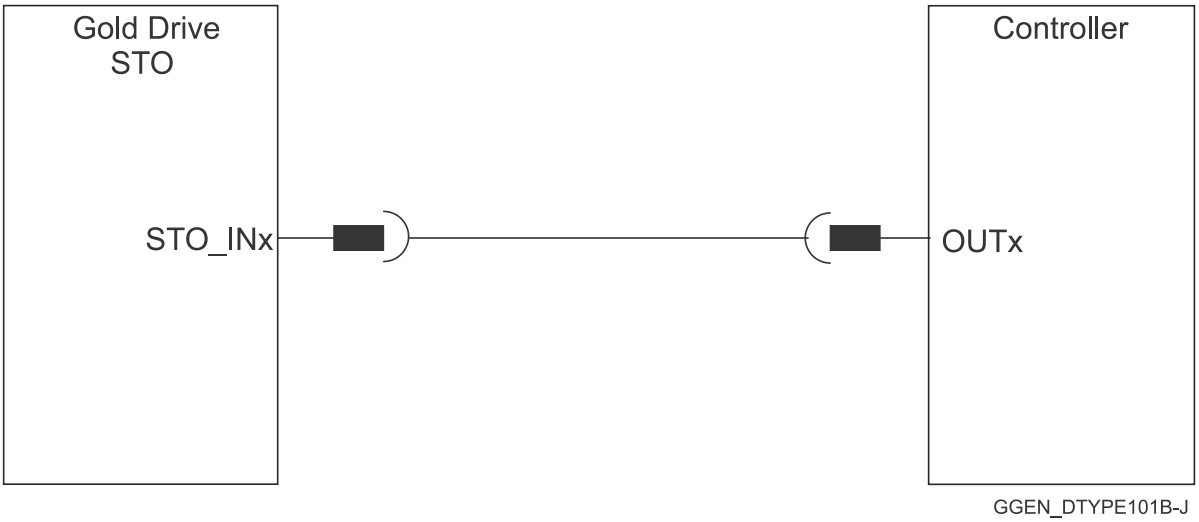

Figure 8: STO Cable Assemblies

7.2. Motor Power Connector Pinouts

See Chapter 8 in the in the MAN-G-Panel Mounted Drives Hardware manual for full details.

Pin	Function	Cable	
		Brushless Motor	**Brushed DC Motor**
M1	Motor phase M1	Motor	N/C
M2	Motor phase M2	Motor	Motor
M3	Motor phase M3	Motor	Motor
PE	Protective Earth Motor Chassis	Motor	Motor

Pin Positions

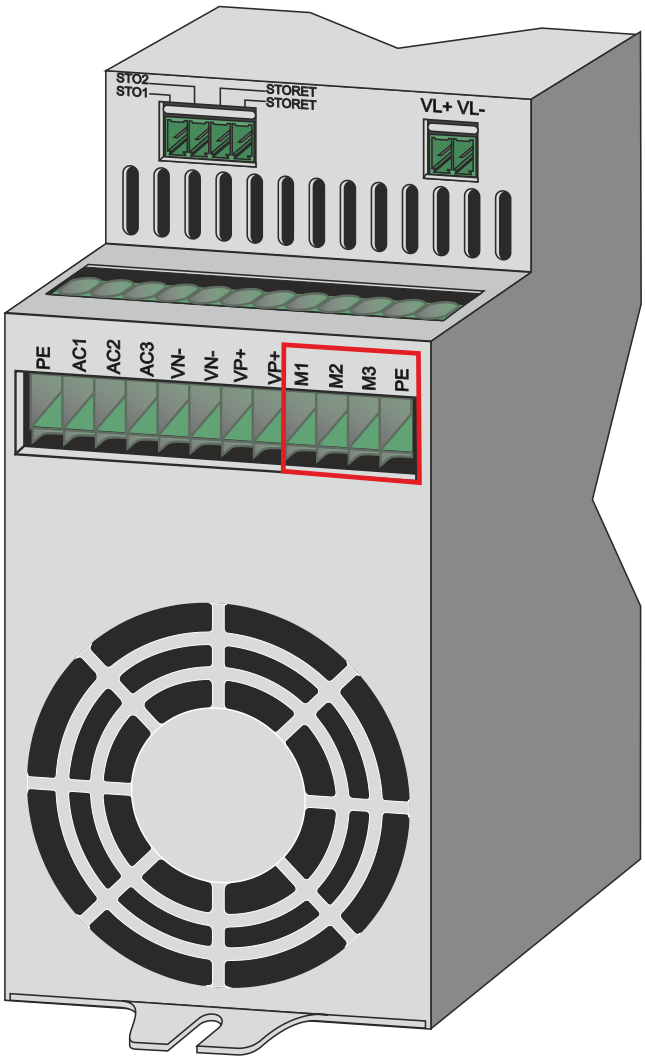

G-TUBA057A

Gold Tuba Motor Cable Connection

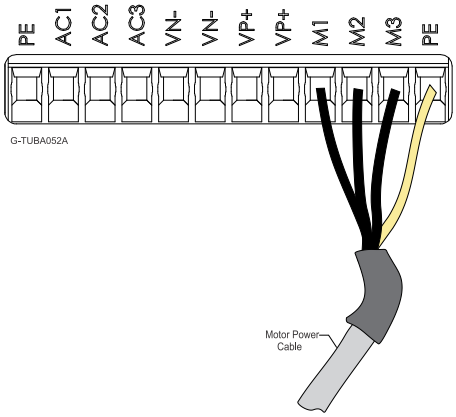

Gold Tuba Motor Cable Connector

To power the drive, connect the M1, M2, M3, and PE pins on the Gold Tuba. The phase connection is arbitrary as Elmo Application Studio II (EAS II) will establish the proper commutation automatically during setup. When tuning a number of drives, you can copy the setup file to the other drives and thus avoid tuning each drive separately. In this case the motor-phase order must be the same as on the first drive.

- For best immunity, it is highly recommended to use a 4-wire shielded (not twisted) cable for the motor connection. The gauge is determined by the actual current consumption of the motor.
- Connect the cable shield to the closest ground connection at the motor end.
- For better EMI performance, the shield should be connected to Protective Earth (PE terminal).
- Ensure that the motor chassis is properly grounded.

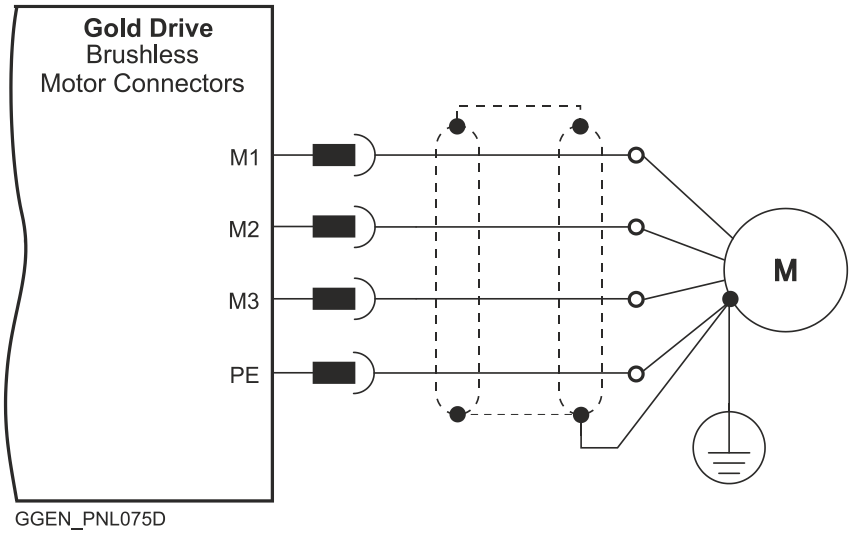

Figure 9: Brushless Motor Power Connection Diagram

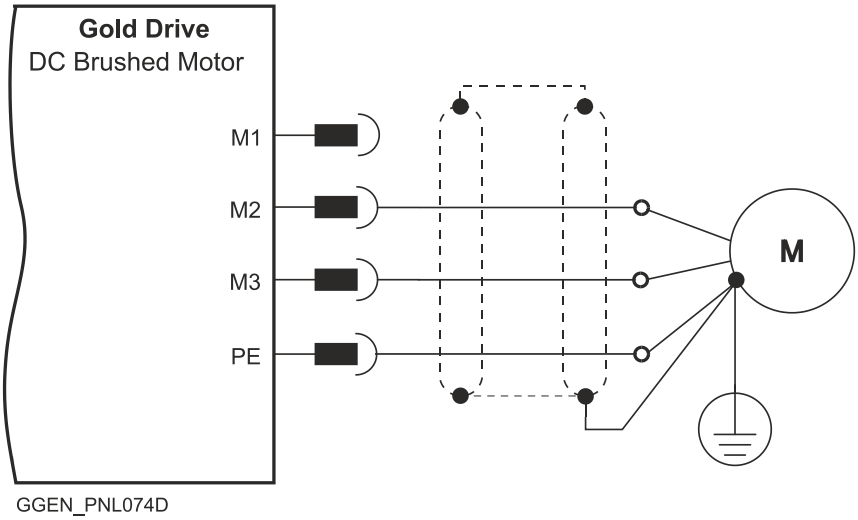

Figure 10: DC Brushed Motor Power Connection Diagram

7.3. Main Power

The Gold Tuba receives power from the main and auxiliary supplies and delivers power to the motor.

Pin	Function	Cable
PE	Protective Earth	AC Power
AC1	Mains AC input Phase 1	AC Power
AC2	Mains AC input Phase 2	AC Power
AC3	Mains AC input Phase 3	AC Power
VN-	DC Negative Power output	DC-Link Power
VN-	DC Negative Power output	DC-Link Power
VP+	DC Positive Power output	DC-Link Power
VP+	DC Positive Power output	DC-Link Power
Pin Positions		

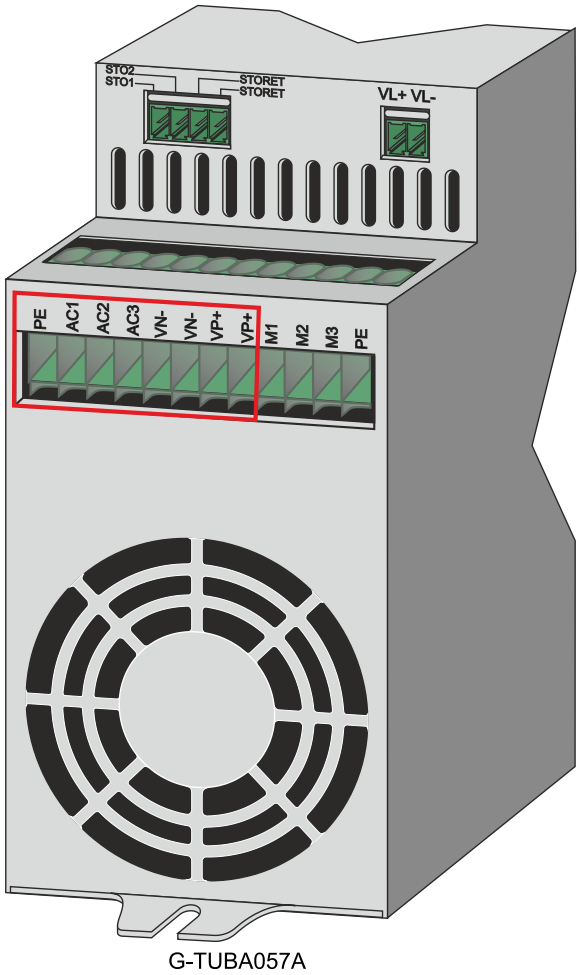

Gold Tuba AC Input and DC Link Connections

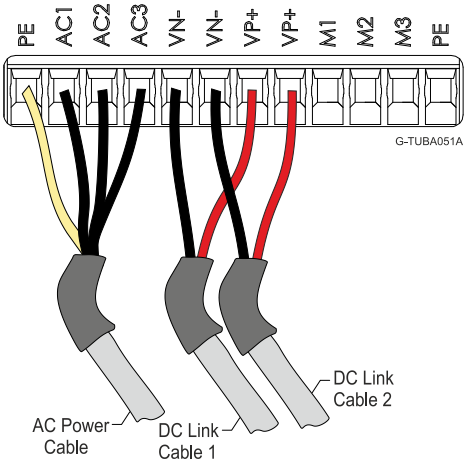

Gold Tuba AC Input and DC Link Connector

Table 1: Connectors for Main Power

The AC power for the Gold Tuba can be delivered from either directly from the mains or from a single or three-phase isolated transformer. The following sections contain topology recommendations for implementing three-phase and a single-phase supply chains.

The power stage of the Gold Tuba is fully isolated from the other sections of the Gold Tuba, such as the control-stage and the heat sink. **This isolation allows the user to connect the common of the control section to the PE, a connection which significantly contributes to proper functionality, safety and EMI immunity, leading to better performance of the Gold Tuba.**

This isolation allows the Gold Tuba to operate with a non-isolated source (a direct-to-mains connection) which eliminates the need for a bulky and expensive isolation transformer.

As well as operating from a non-isolated/direct-to-mains AC supply, the Gold Tuba can also operate from an isolated transformer.

The AC voltage level must be limited to 270 VAC so as not to exceed the maximum supply voltage in the case of a 230 VAC drive, or 528 VAC so as not to exceed the maximum supply voltage in the case of a 480 VAC drive.

7.3.1. Direct-to-Mains Power Source (Non-Isolated)

This section relates to the configuration of the drive, which is connected directly to the mains.

To connect the non-isolated AC power supply:

1. For best noise immunity, a shielded (not twisted) cable is recommended (not mandatory) for the AC input cable.
2. A 4-wire shielded cable should be used:
   a. Connect the 3-phase leads of the main input cable to the AC1, AC2 and AC3 terminals of the main input connector.
   b. For safety requirements, the green/yellow-wire must be connected to the protective earth (PE terminal). Connect the Protective Earth wire to the PE terminal on the main AC connector.
   c. For better EMI performance, the shield should be connected to Protective Earth (PE).
3. The gauge of the cable strands is determined by the actual current of the drive.

Caution For all the following Topologies:

- Do not connect VN- to PE. **In a direct-to-mains connection the VN- must *not* be connected to the PE,** as this will cause irreparable damage to the system.
- Take care and note that in a direct-to-mains connection the Neutral point is *not* the most negative voltage level. It is the mid-point level of the rectified DC bus.

7.3.1.1. Three-Phase Direct-to-Mains Connection Topology

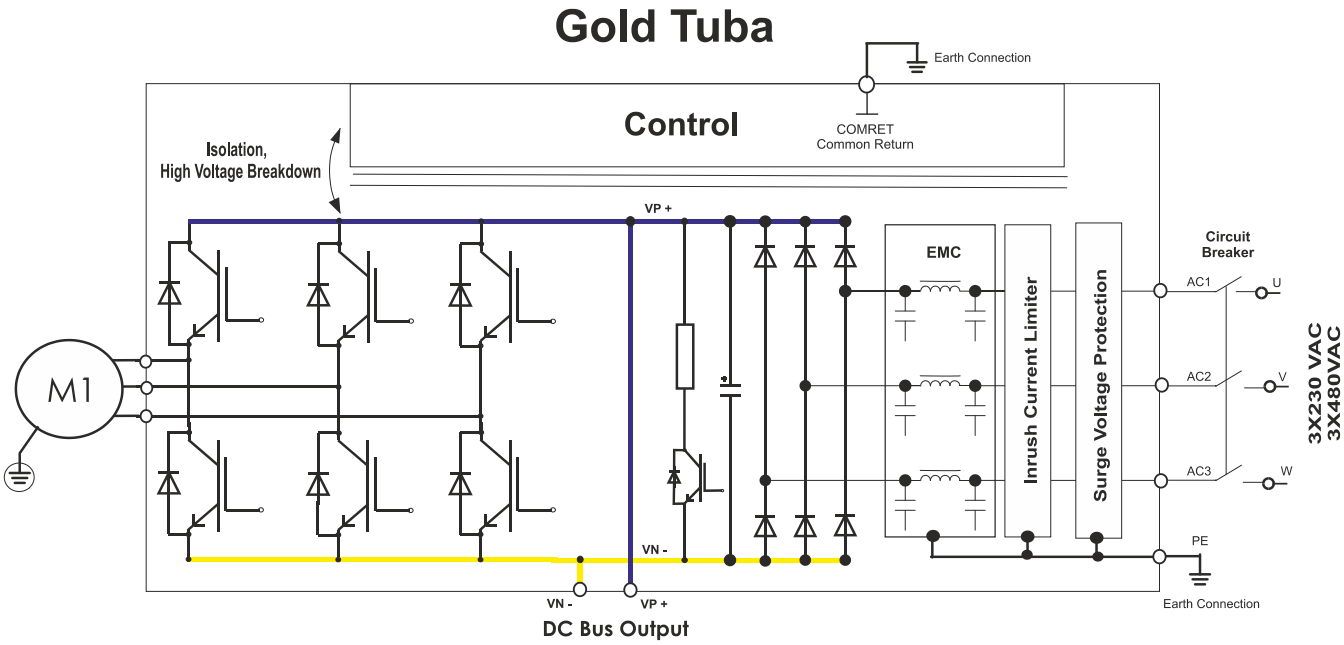

Figure 11: Non-Isolated Three-Phase Source - Connection Topology

7.3.1.2. Single-Phase Direct-to-Mains Connection Topology

Note: The single-phase connection is suitable for G-TUB30/230 model only.

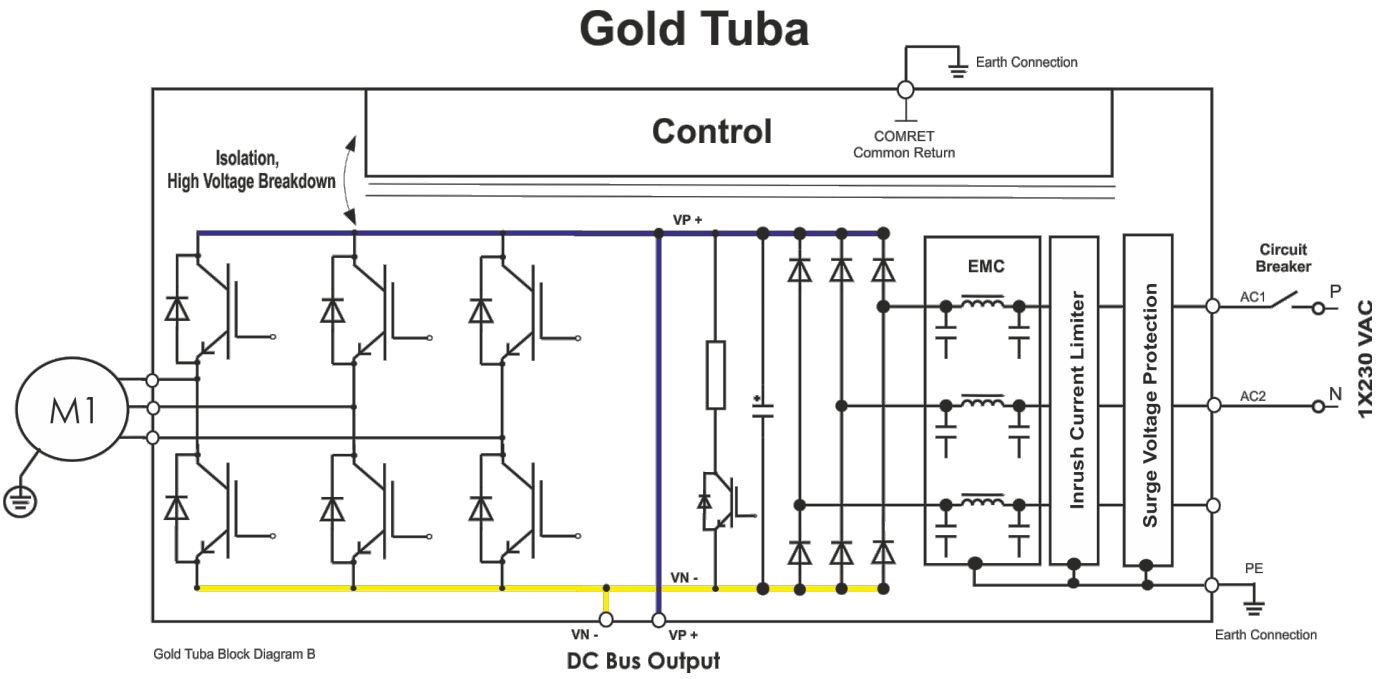

Figure 12: Non-Isolated Single-Phase Source - Connection Topology

7.3.1.3. Multiple Connections Topology

In a multi-axis application it is likely that a single power supply can feed several drives in parallel. The Gold Tuba can be used to supply power to several drives through its DC output VP+ and VN- connections, directly to the other drives. This is referred to as the DC-Link.

Note: **These drive(s) must be Isolated DC drives.**

This topology is efficient and cost saving, by reducing the number of power supplies and the amount of wiring. Most importantly it utilizes an energy sharing environment among all the drives that share the same DC bus network. In addition, the G-Tuba internal shunt regulator services the complete network.

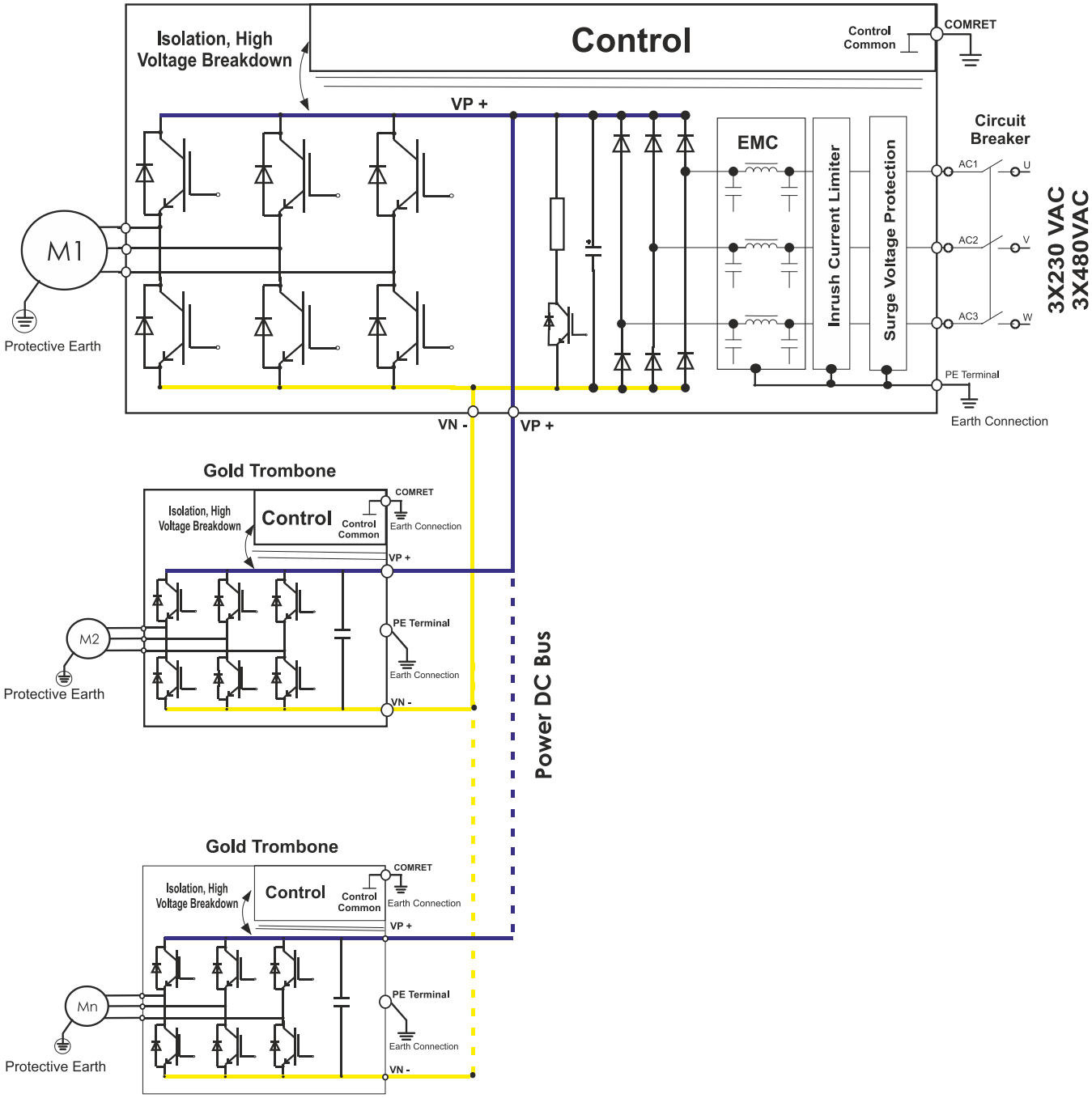

Figure 13: Non-Isolated Three-Phase Source - Multiple Connection Topology

7.3.2. Shunt Regulator

A shunt regulator is included in the Gold Tuba. The shunt regulator is a switching type, wherein dissipative elements (power resistors) are switched across the DC bus, whenever the voltage reaches a predetermined level. The function of the shunt regulator is to regulate the voltage of the DC bus during the period of motor deceleration, when there is a net energy outflow from the motor to the servo drive, to prevent the servo drive from disabling itself as a result of an “over-voltage” type reason.

When the capacitors charge-up reaches the predetermined shunt threshold level, the shunt regulator begins its regulating action. The bus is regulated to the specific model type voltage, until the regeneration-energy is dissipated.

7.3.3. Fault Protection

The Gold Tuba includes a duty cycle limiter, which inhibits shunt whenever On and Off time exceeds 2%. This feature protects the shunt regulator when high-inertia loads are driven by the servo drive(s) or when too high AC voltage is applied to the power supply (i.e. DC output is already above the threshold of the shunt).

7.4. Auxiliary Power

Backup functionality is required to store control parameters in the event of a mains power outage.

Note that the Gold Tuba always requires an external 24 VDC power supply, regardless of whether or not backup functionality is required.

Pin	Function	Cable
VL+	+24 V Auxiliary Supply Input Positive	Auxiliary Power
VL-	24 V RET Auxiliary Supply Input Return	Auxiliary Power
Pin Positions		

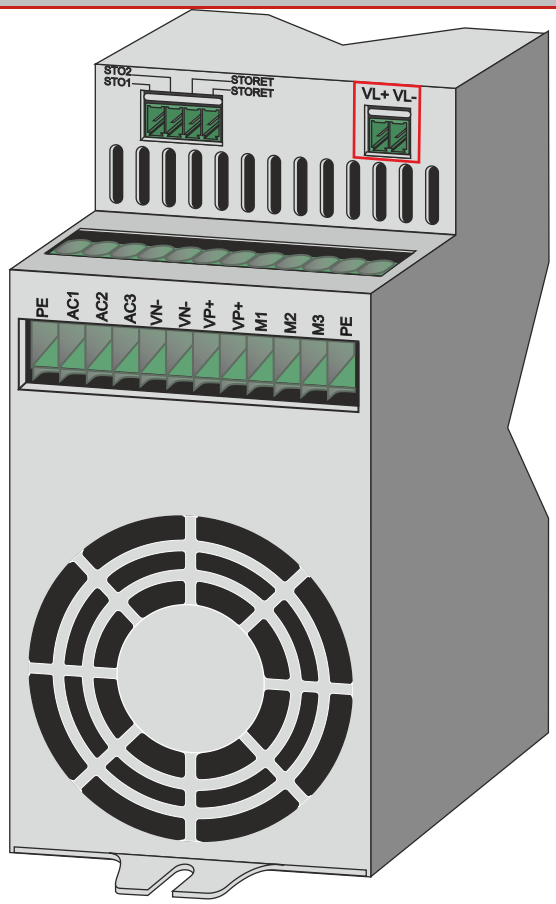

G-TUBA057A

2-Pin Pluggable 3.81 mm Phoenix Connector

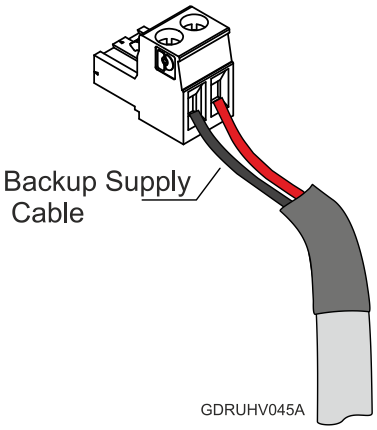

2-Pin Phoenix Plug-in Connector

Connect the auxiliary 24 VDC power supply as described below.

To connect the 24 VDC power supply:

1. Use a 24 AWG twisted pair shielded cable. The shield should have copper braid.
2. The source of the 24VDC power supply must be isolated from the mains.
3. For safety and EMI reasons, connect the return of the 24 VDC power supply to the closest ground (PE) in the power supply side.
4. Connect the cable shield to the closest ground (PE) near the power source.
5. Before applying power, first verify that the polarity of the connection is correct.

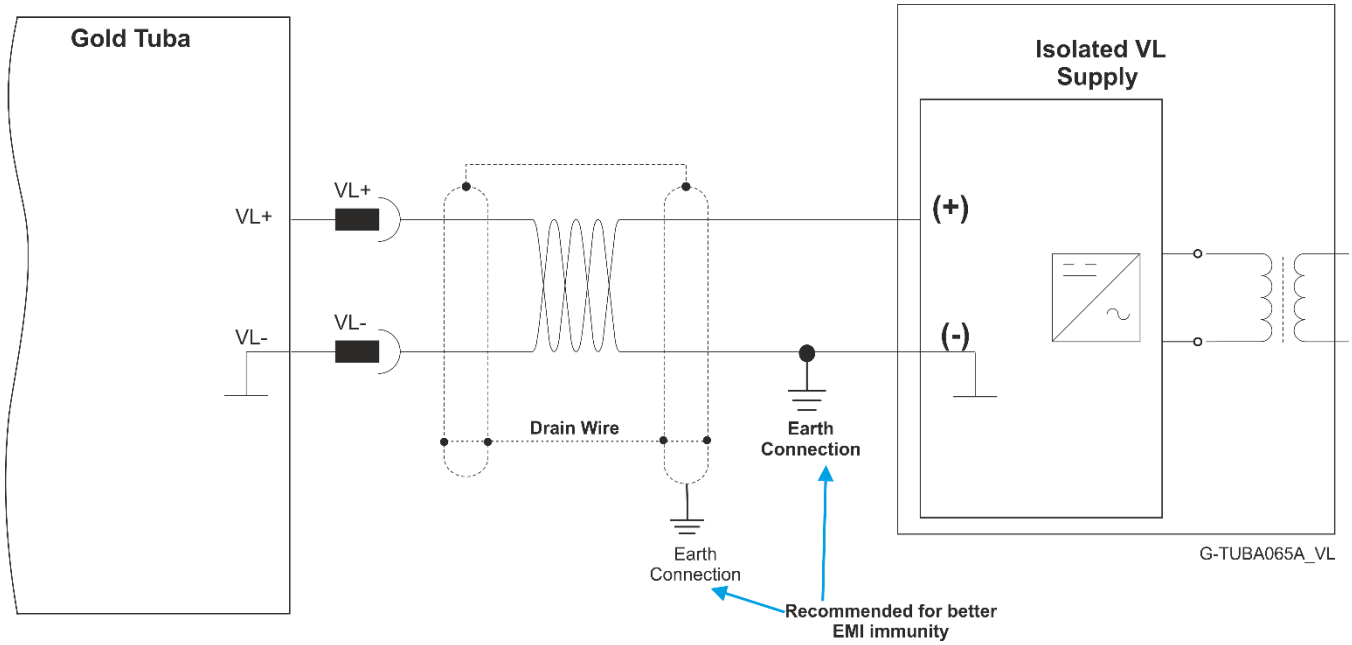

Figure 14: Auxiliary 24 VDC Power Supply Connection Diagram

7.5. Port A

See Section 10.3 in the in the MAN-G-Panel Mounted Drives Hardware manual for full details.

	Incremental Encoder		Absolute Serial Encoder	
Pin on Port A	**Signal**	**Function**	**Signal**	**Function**
12, 4	+5V	Encoder +5V supply	+5V	Encoder +5V supply
3,9,11,13	SUPRET	Common Return	SUPRET	Supply Return
6	PortA_ENC_A+	Channel A+	ABS_CLK+	Abs encoder clock +
5	PortA_ENC_A-	Channel A-	ABS_CLK-	Abs encoder clock -
15	PortA_ENC_B+	Channel B+	ABS_DATA+	Abs encoder data +
14	PortA_ENC_B-	Channel B-	ABS_DATA-	Abs encoder data -
8	PortA_ENC_INDEX+	Index+	Reserved	Reserved
7	PortA_ENC_INDEX-	Index-	Reserved	Reserved
2	HA	Hall sensor A	HA	Hall sensor A
10	HB	Hall sensor B	HB	Hall sensor B
1	HC	Hall sensor C	HC	Hall sensor C

Pin Positions

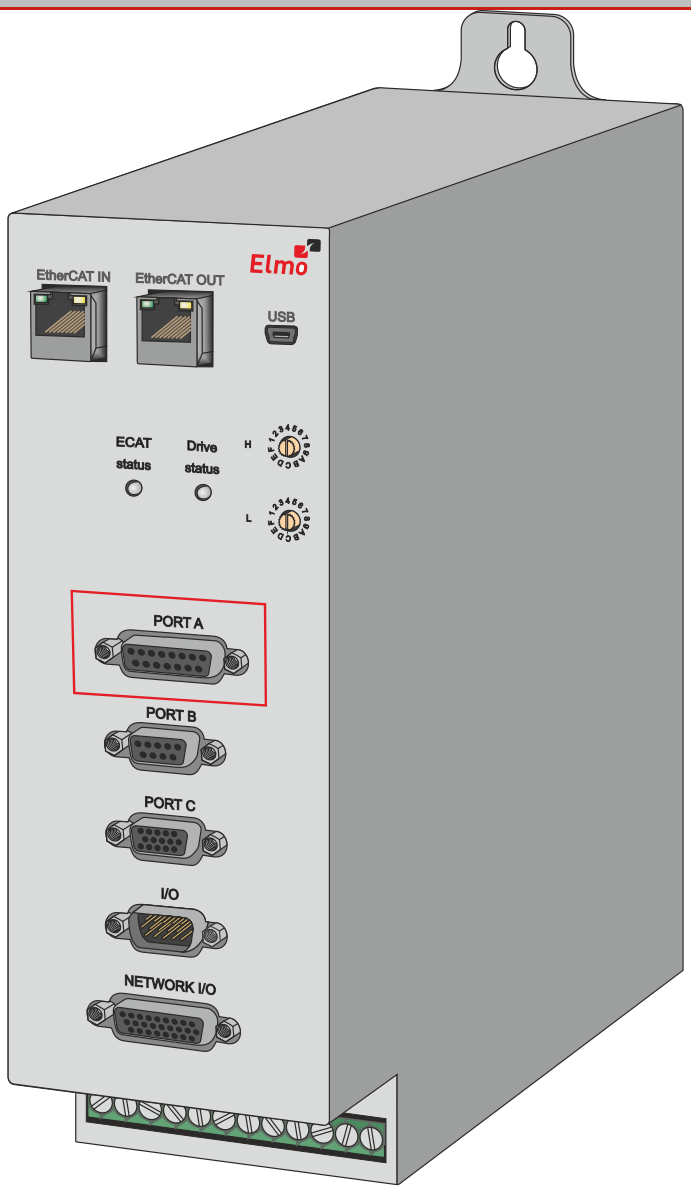

G-TUBA056A

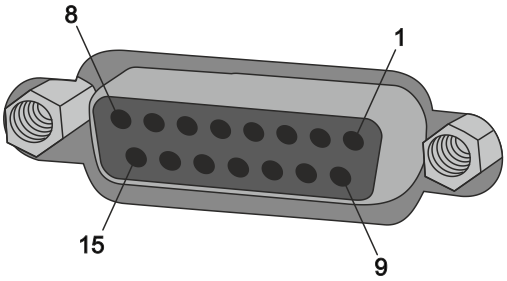

G-TUBA060A

15-Socket D-Type Connector

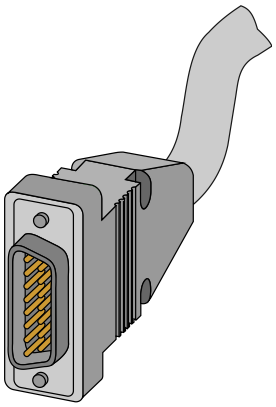

G-BAS081A

15-Pin D-Type Male Connector

Table 2: Port A Pin Assignments

7.5.1. Incremental Encoder

The following figure describes the connections at Port A for the Incremental encoder.

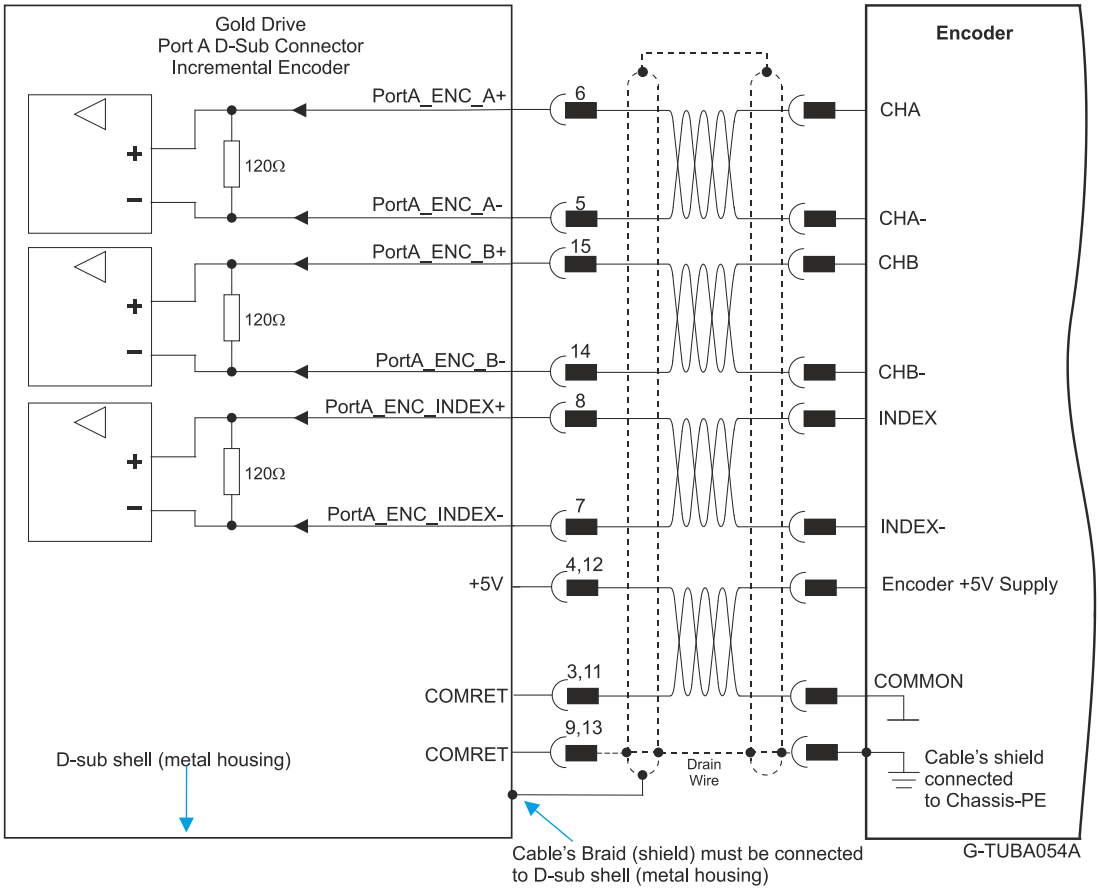

Figure 15: Port A D-Type Incremental Encoder Input – Recommended Connection Diagram

7.5.2. Hall Sensor

The following figure describes the connections at Port A for the Hall Sensor.

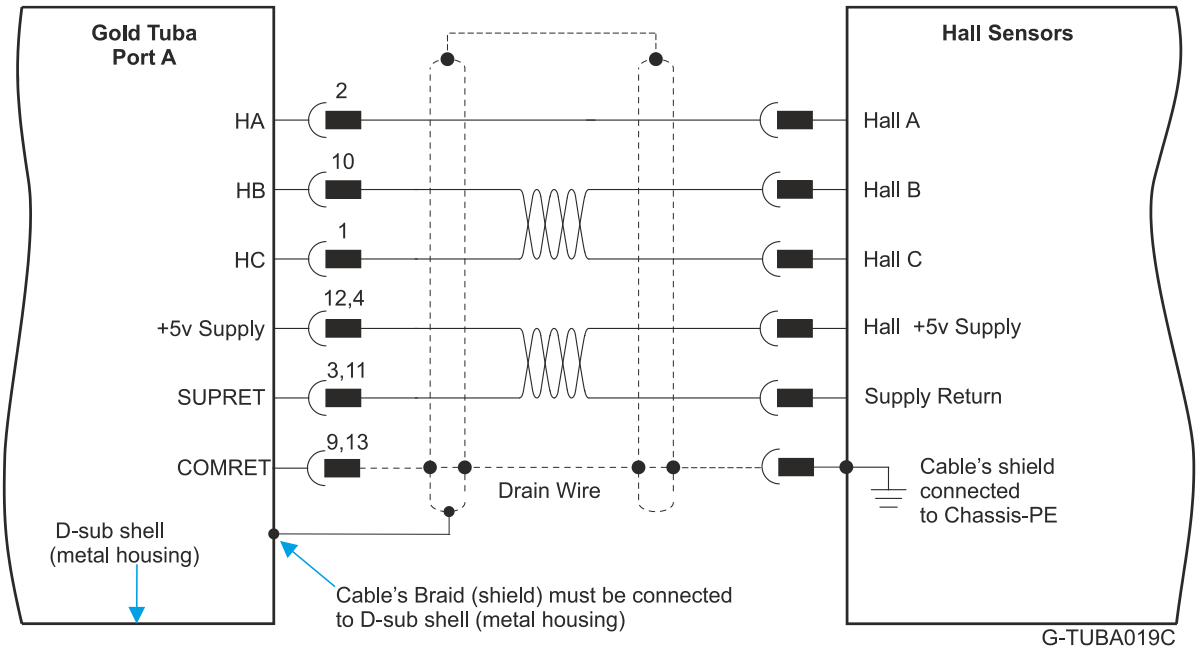

Figure 16: Hall Sensor Connection Diagram

7.5.3. Absolute Serial Type Encoder

The following figures describe the connections at Port A for the Absolute Serial type encoders.

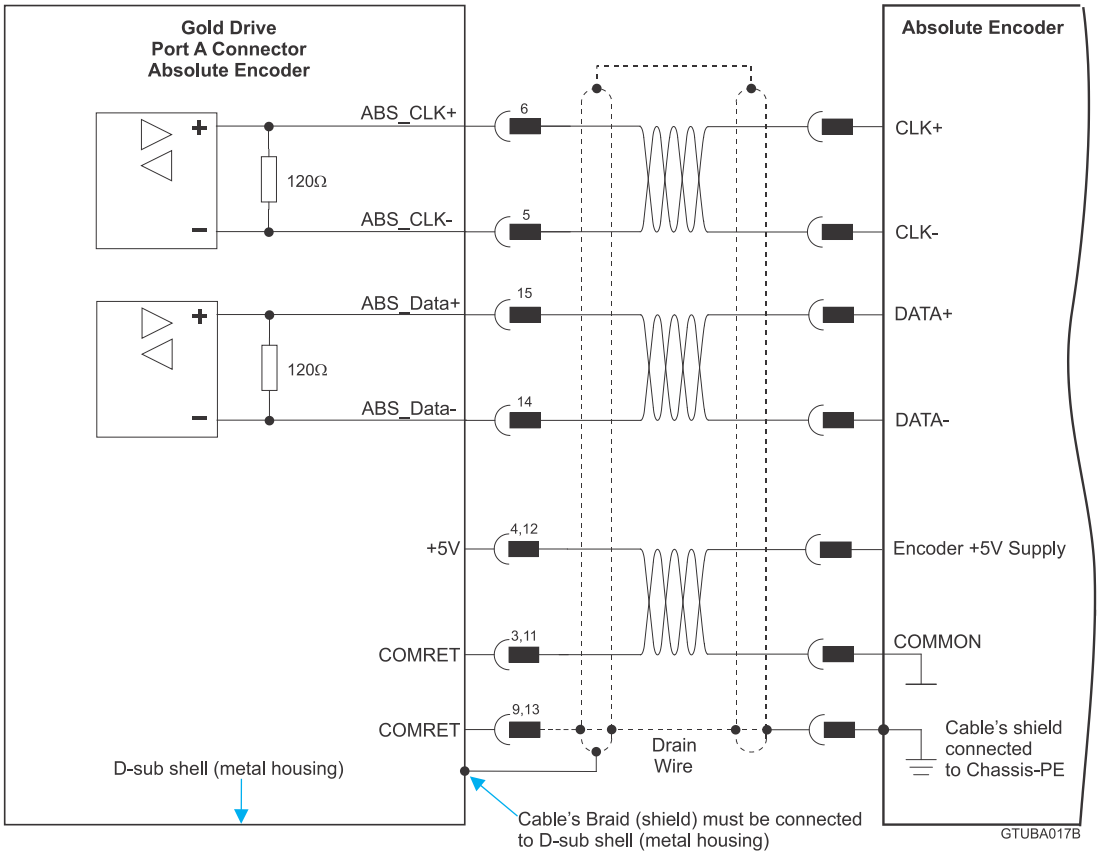

Figure 17: Absolute Serial Encoder – Recommended D-Type Connection Diagram for EnDAT, Biss, and SSI

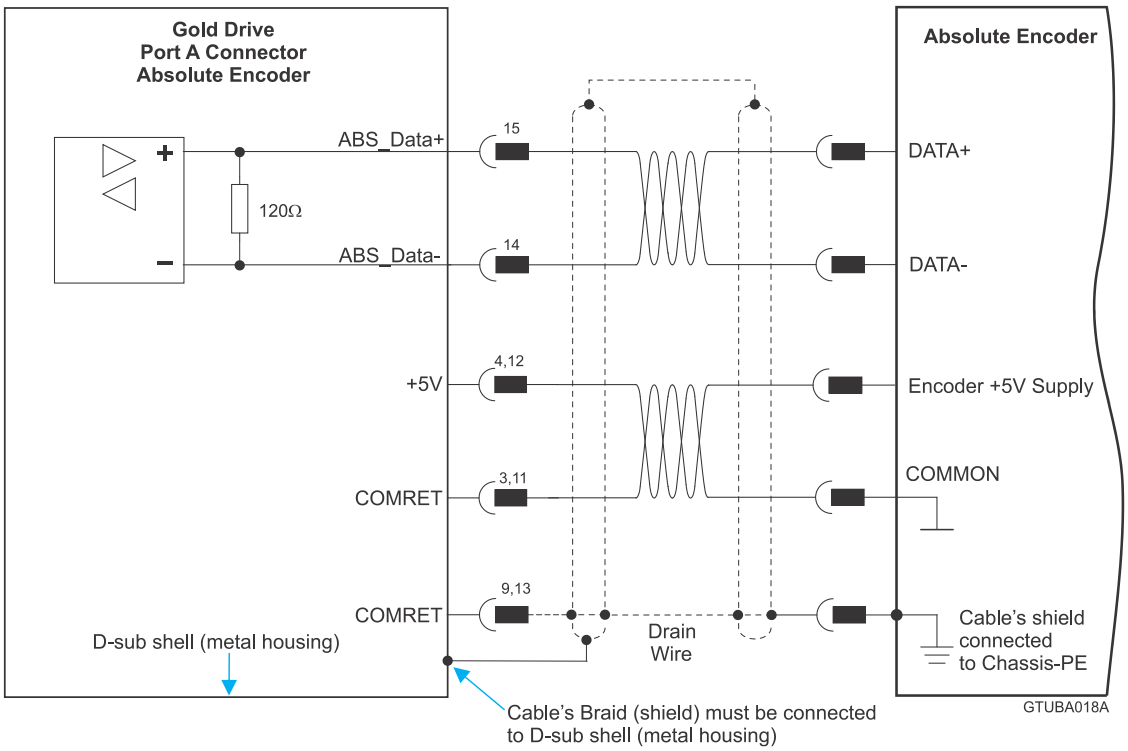

Figure 18: Absolute Serial Encoder – Recommended D-Type Connection Diagram for Sensors Supporting Data Line Only (NRZ types, e.g., Panasonic / Mitutoyo / Sanyo Danki / Tamagawa)

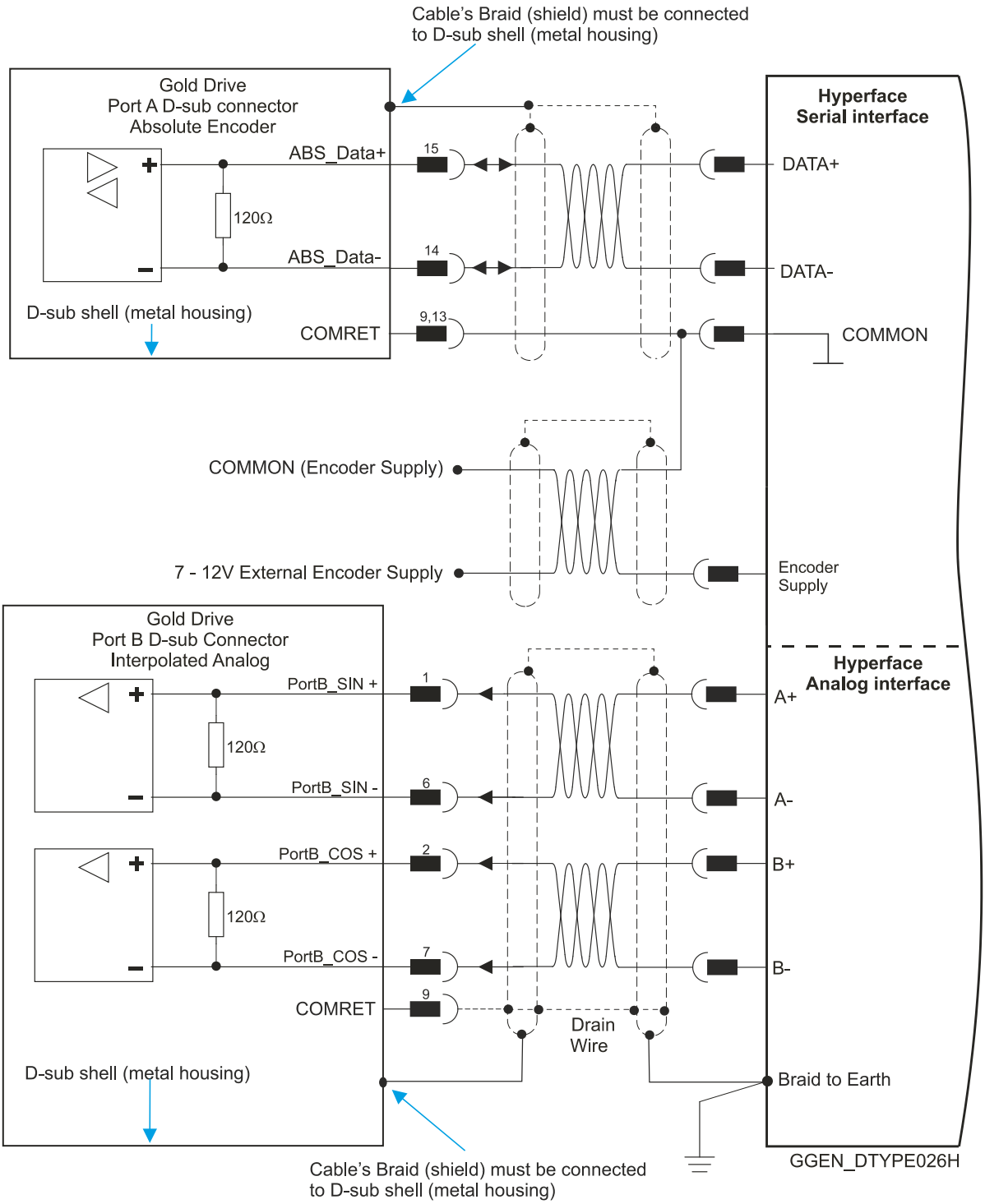

Figure 19: Absolute Serial Encoder – Recommended D-Type Connection Diagram for Stegmann Hiperface

7.6. Port B

See Section 10.4 in the in the MAN-G-Panel Mounted Drives Hardware manual for full details.

	Incremental or Interpolated Analog Encoder		Resolver	
	G-TUBXX/YYYXEXXX		G-TUBXX/YYYXRXXX	
Pin on Port B	Signal	Function	Signal	Function
4	+5V	Encoder +5V supply	NC	NC
5, 9	SUPRET	Supply Return	SUPRET	Supply Return
1	PortB_ENC_A+/SIN+	Channel A+ / Sine+	SIN+	Sine+
6	PortB_ENC_A-/SIN-	Channel A- / Sine-	SIN-	Sine-
2	PortB_ENC_B+/COS+	Channel B+ / Cosine+	COS+	Cosine+
7	PortB_ENC_B-/COS-	Channel B- / Cosine-	COS-	Cosine-
3	PortB_ENC_INDEX+	Index+	RESOLVER_OUT+	Vref f=1/TS, 50 mA Max.
8	PortB_ENC_INDEX-	Index -	RESOLVER_OUT-	Vref complement f= 1/TS, 50 mA Max.

Pin Positions

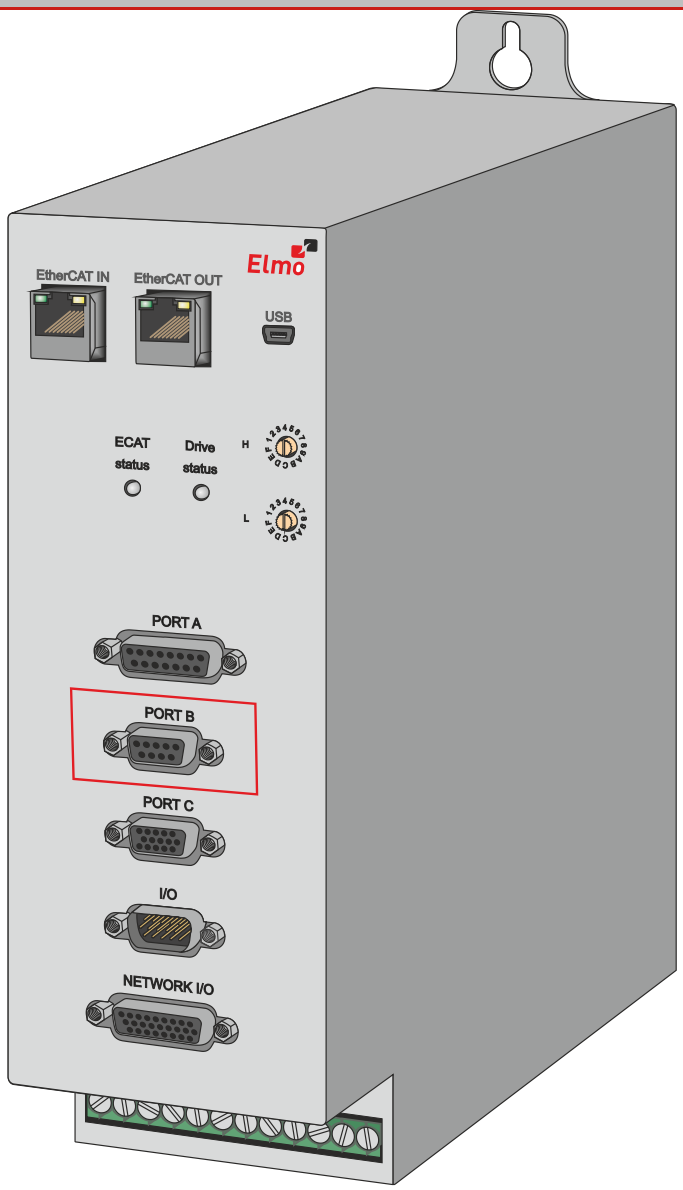

G-TUBA056A

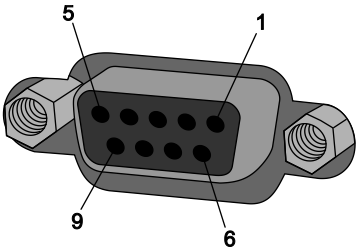

G-TUBA061A

9-Socket D-Type Connector

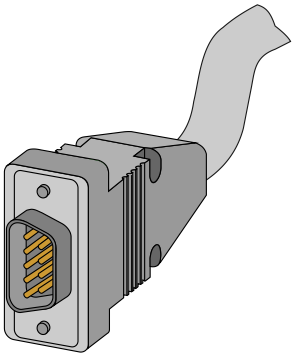

G-BAS083A

9-Pin D-Type Male Connector

Table 3: Port B Pin Assignments

7.6.1. Incremental Encoder

The following figure describes the connections at Port B for the Incremental encoder.

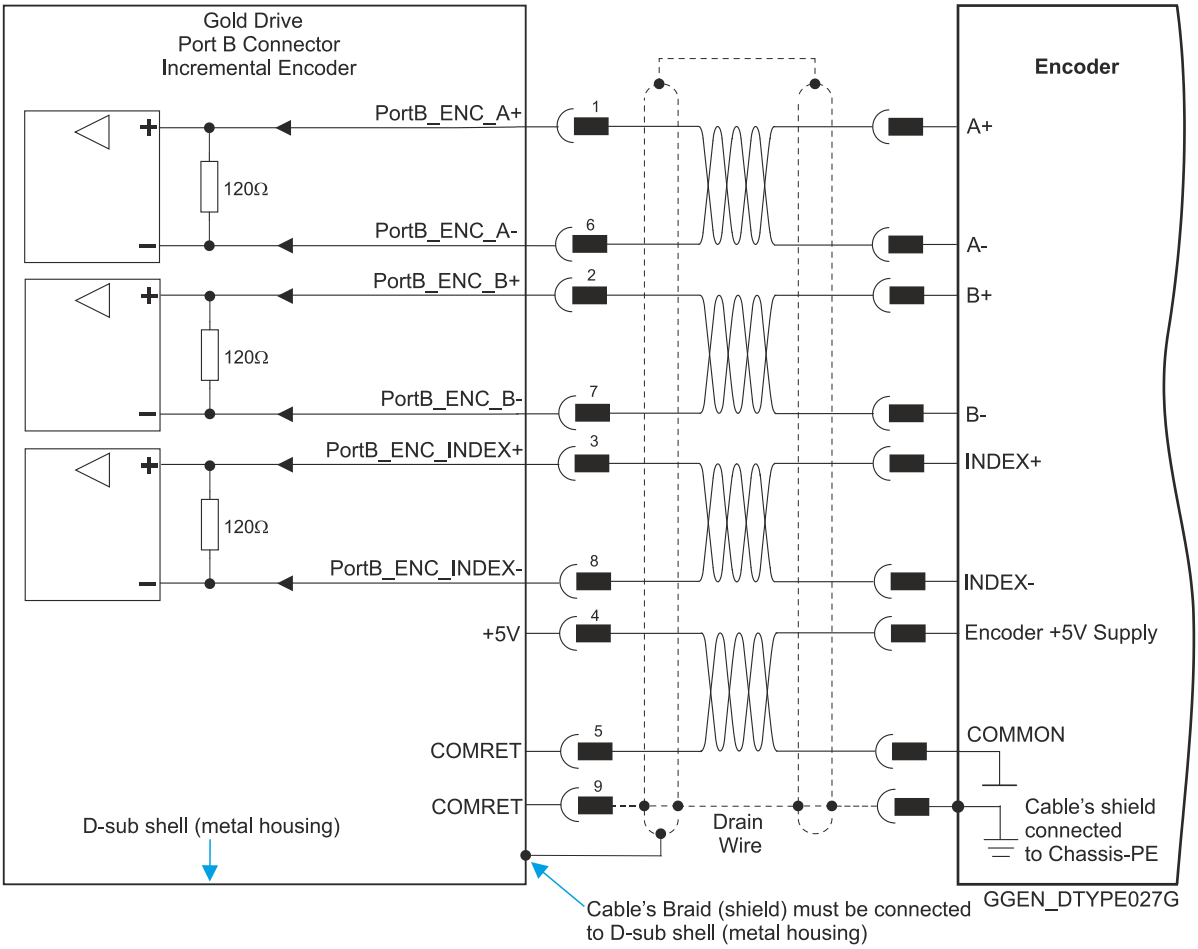

Figure 20: Port B Incremental Encoder Input – Recommended D-Type Connection Diagram

7.6.2. Interpolated Analog Encoder

The following figure describes the connections at Port B for the Interpolated Analog encoder.

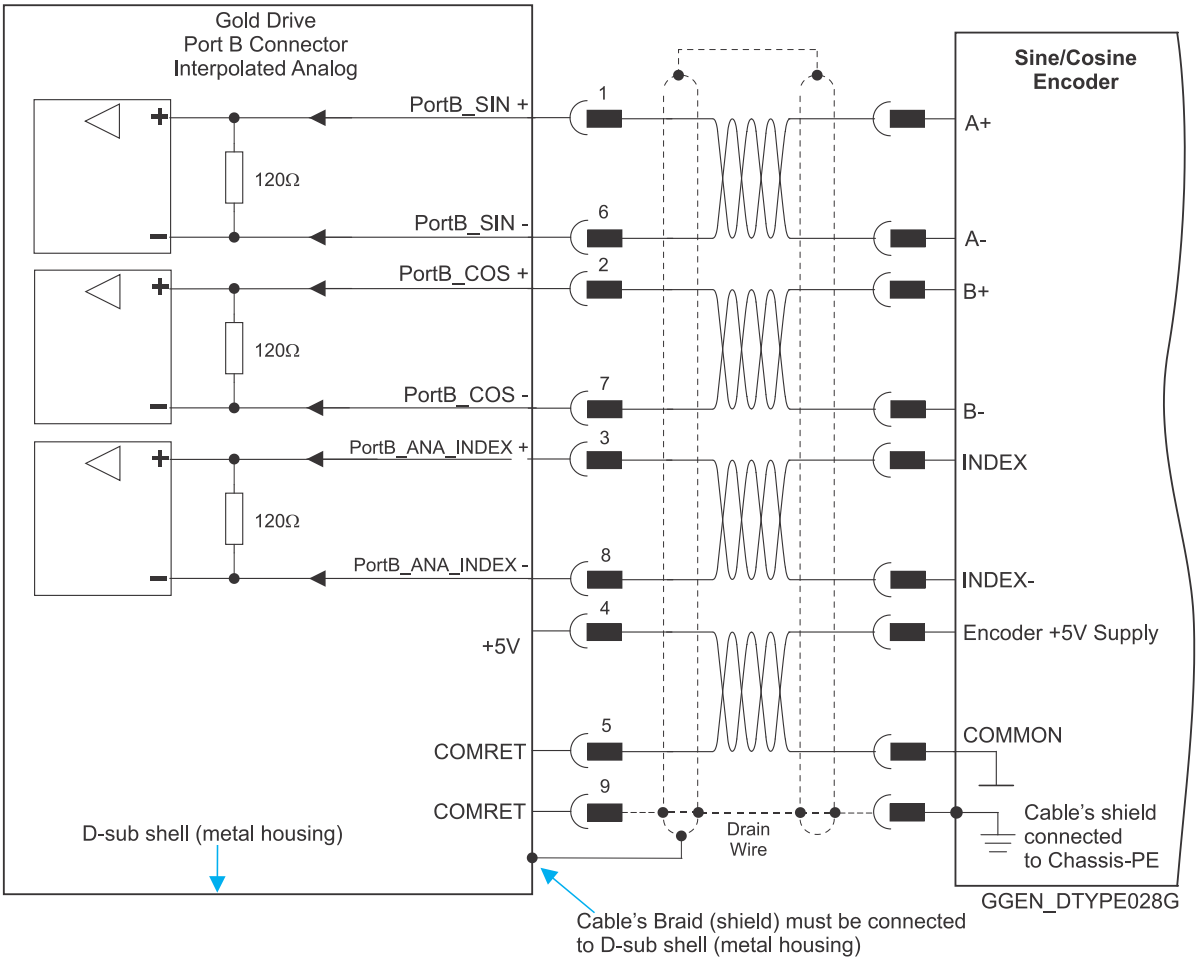

Figure 21: Port B - Interpolated Analog Encoder D-Type Connection Diagram

7.6.3. Resolver

The following figure describes the connections at Port B for the Resolver encoder.

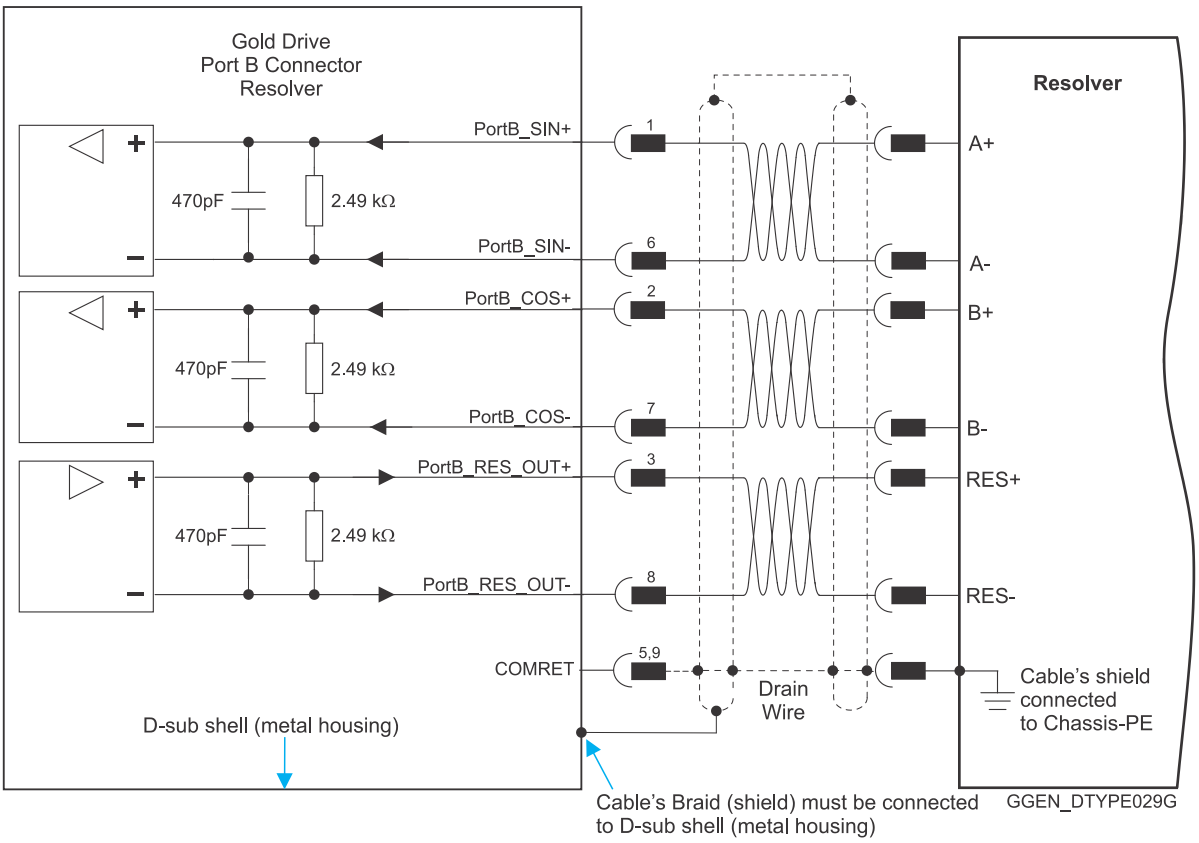

Figure 22: Port B – Resolver D-Type Connection Diagram

7.7. Port C and Analog Input

The Port C connector includes the following functions:

- Port C: Refer to Sections 10.5 in the in the MAN-G-Panel Mounted Drives Hardware manual for full details
- Analog input: See Section 11.2 in the in the MAN-G-Panel Mounted Drives Hardware manual for full details.

Pin on Port C	Signal	Function
1	PortC_ENCO_A+	Buffered Channel A+/Pulse+/PWM+ output
2	PortC_ENCO _A-	Buffered Channel A-/Pulse-/PWM- output
3	PortC_ENCO _B+	Buffered Channel B+/Dir+ output
4	PortC_ENCO _B-	Buffered Channel B-/Dir- output
5	PortC_ENCO _ Index+	Buffered Channel INDEX+ output
6	Reserved	Reserved
7, 12	Reserved	Reserved
8	Reserved	Reserved
9	COMRET	Common return
10	PortC_ENCO _ Index-	Buffered Channel INDEX- output
11	Reserved	Reserved
13	ANALRET	Analog Input Return
14	ANALOG1-	Analog input 1-
15	ANALOG1+	Analog input 1+

Pin Positions

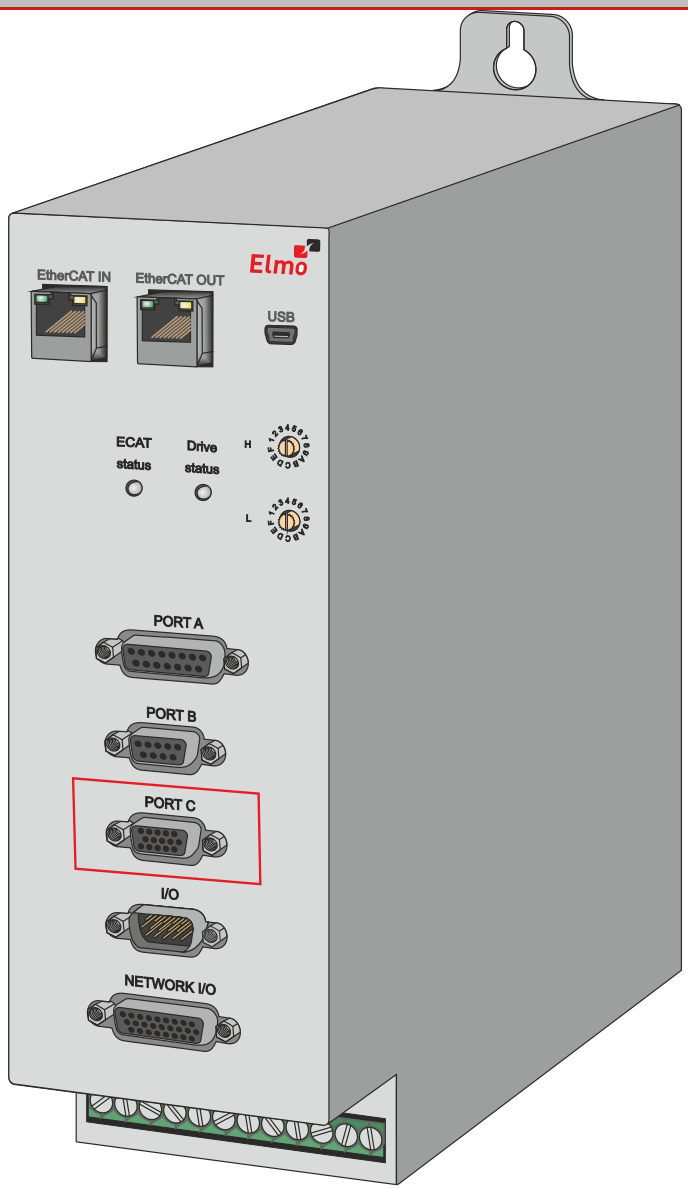

G-TUBA056A

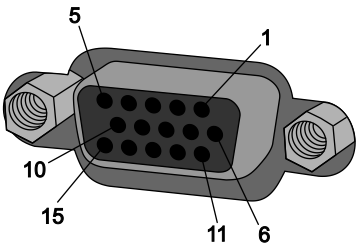

G-TUBA062A

15-Socket High Density D-Type Connector

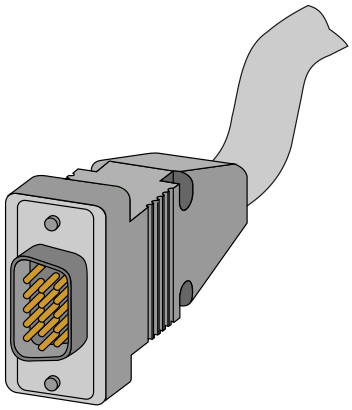

G-BAS084A

15-Pin High Density D-Type Male Connector

Table 4: Port C Pin Assignments

7.7.1. Port C

The following figure describes the connections at Port C for the Emulated Encoder Differential.

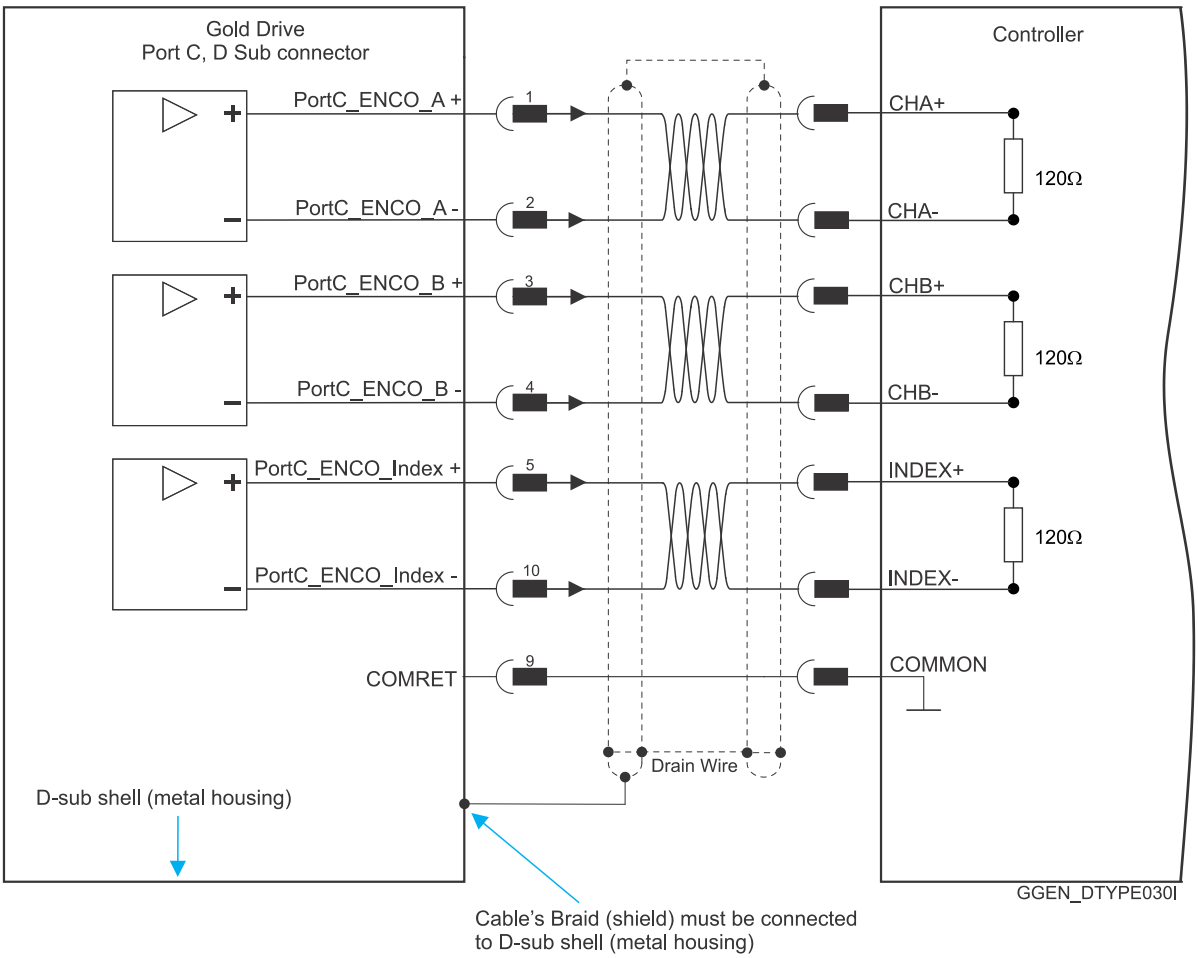

Figure 23: Emulated Encoder Differential Output – Recommended D-Type Connection Diagram

7.7.2. Analog Input

The following circuit describes the internal interface of the Analog input.

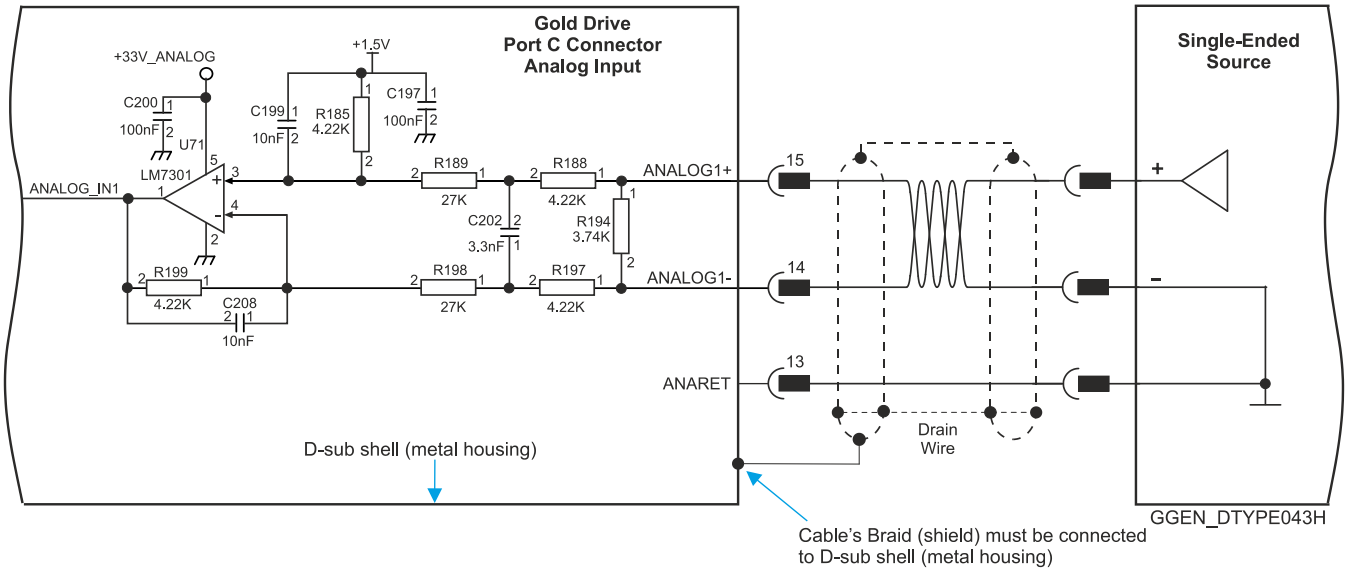

Figure 24: Differential Analog D-Type Input

7.8. STO Connector

See Chapter 9 in the in the MAN-G-Panel Mounted Drives Hardware manual for full details.

Pin	Function	Cable
STO1	STO1 Input	STO cable
STO2	STO2 Input	STO cable
STORET	STO Return Signal	STO cable
STORET	STO Return Signal	STO cable
Pin Positions		
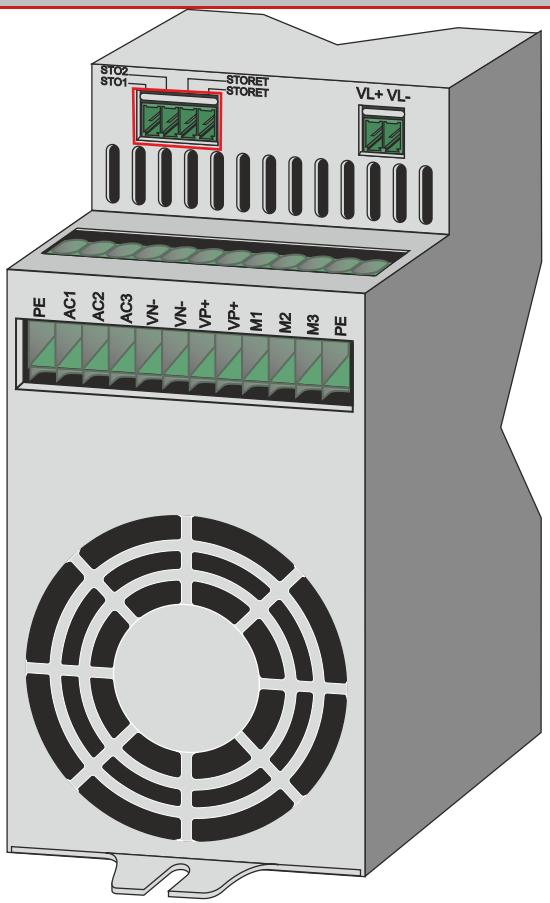 G-TUBA057A **4-Pin Pluggable 3.81 mm Phoenix Connector**	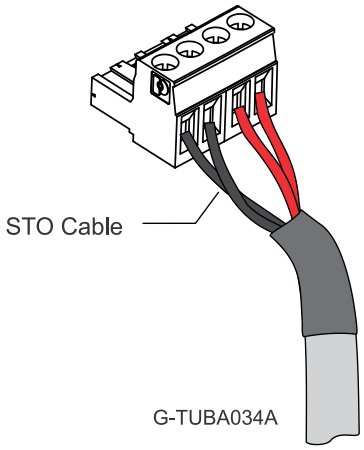 **4-Pin Phoenix Plug-in Connector**	

The following circuits describe the STO wiring options.

7.8.1. Source Mode PLC Voltage Level Input

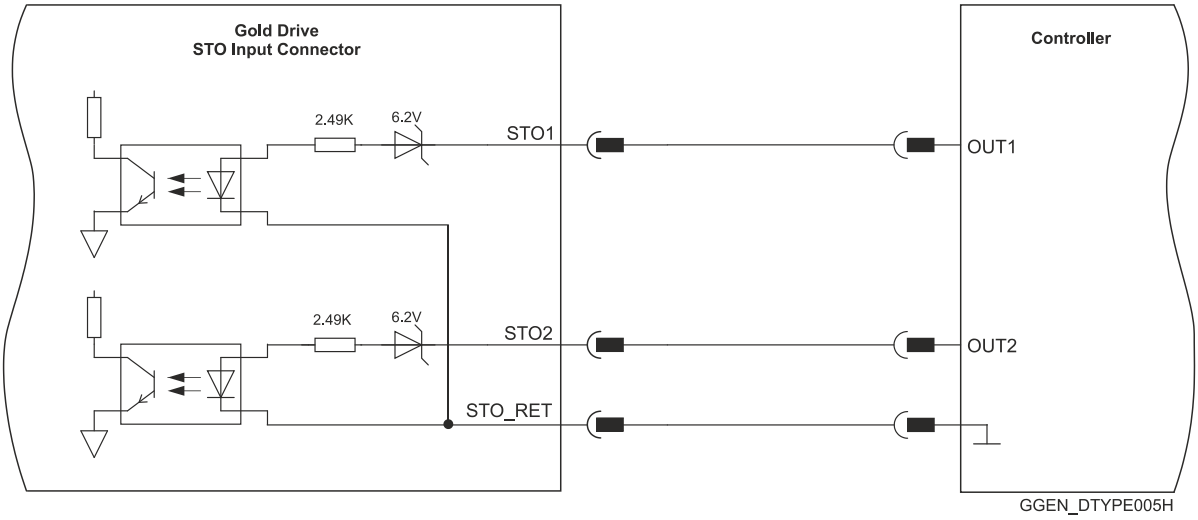

Figure 25: STO Input Connection – PLC Source Option

Both STO_RET are internally shorted.

7.8.2. TTL Mode TTL Voltage Level Input

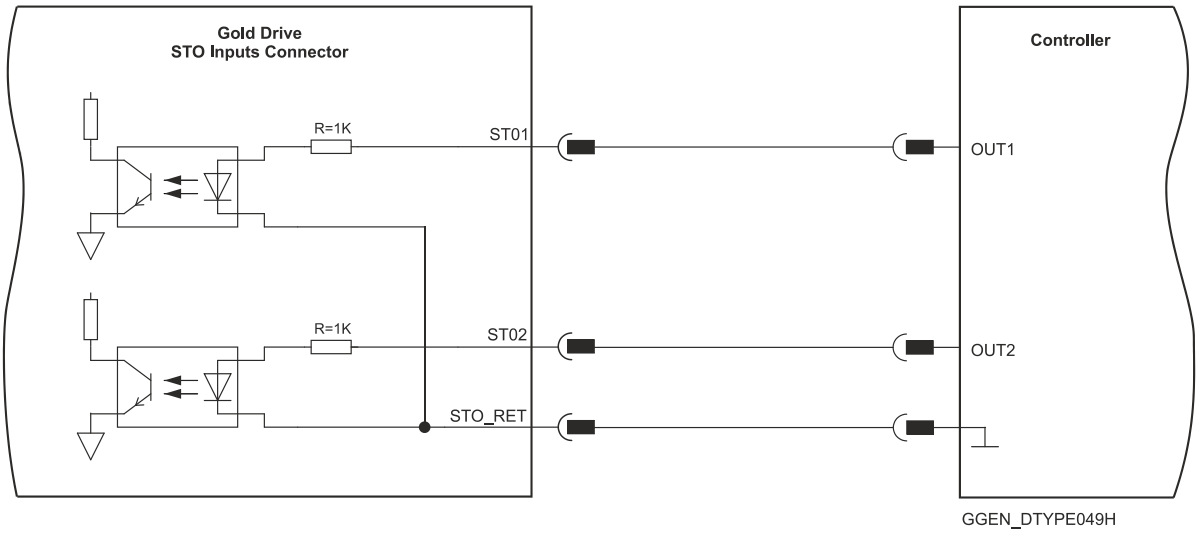

Figure 26: STO Input Connection – TTL Option

7.8.3. STO Output

There are two available options:

- I/O and STO type without STO
- I/O and STO type with STO

If the STO STATUS OUT is configured, then OUT4 and IN6 will not be available. Refer to Figure 27 below for details of the connections. Refer to Chapter 9 in the in the MAN-G-Panel Mounted Drives Hardware manual for full details.

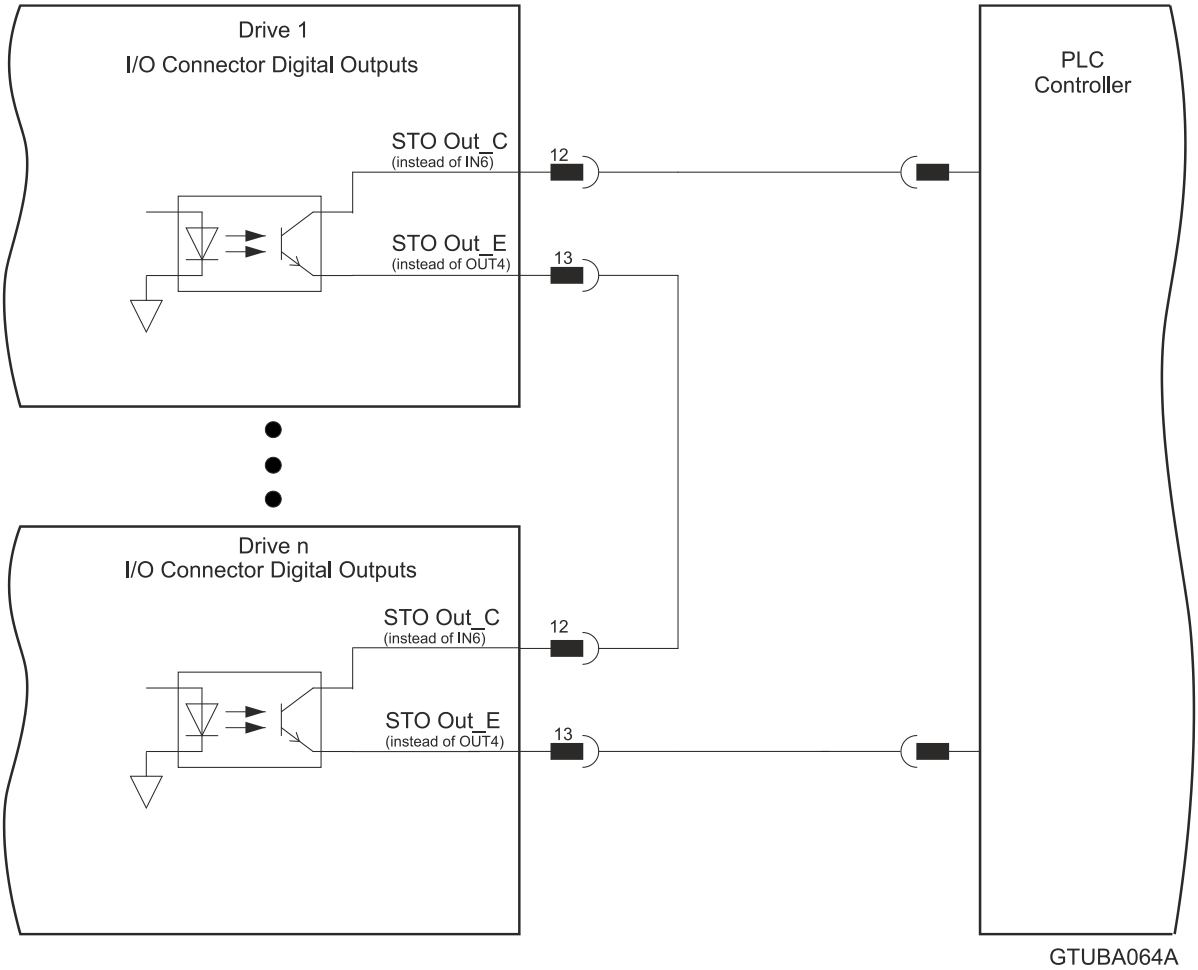

Figure 27: STO Output

7.9. Digital Inputs and Outputs

The following table lists the Gold Tuba digital input and output pin assignments.

Refer to Chapter 11 in the in the MAN-G-Panel Mounted Drives Hardware manual for full details.

I/O Pins	Signal	Function
1	IN1	High speed programmable input 1
2	IN2	High speed programmable input 2
7	IN3	High speed programmable input 3
8	IN4	High speed programmable input 4
11	IN5	High speed programmable input 5
12	IN6	High speed programmable input 6 ***or***
		STO OUT Collector in the **O** version
6	INRET1-6	Inputs 1 to 6 return for the **S/T** version
		Positive input 1 to 6 for the **H** version
3	OUT1	Programmable output 1
4	OUT2	Programmable output 2
5	OUT3	Programmable output 3
13	OUT4	Programmable output 4 ***or***
		STO OUT Emitter in the **O** version
10, 15	VDD	Supply for out 1-4
9, 14	VDDRET	Supply return for out 1-4

Pin Positions

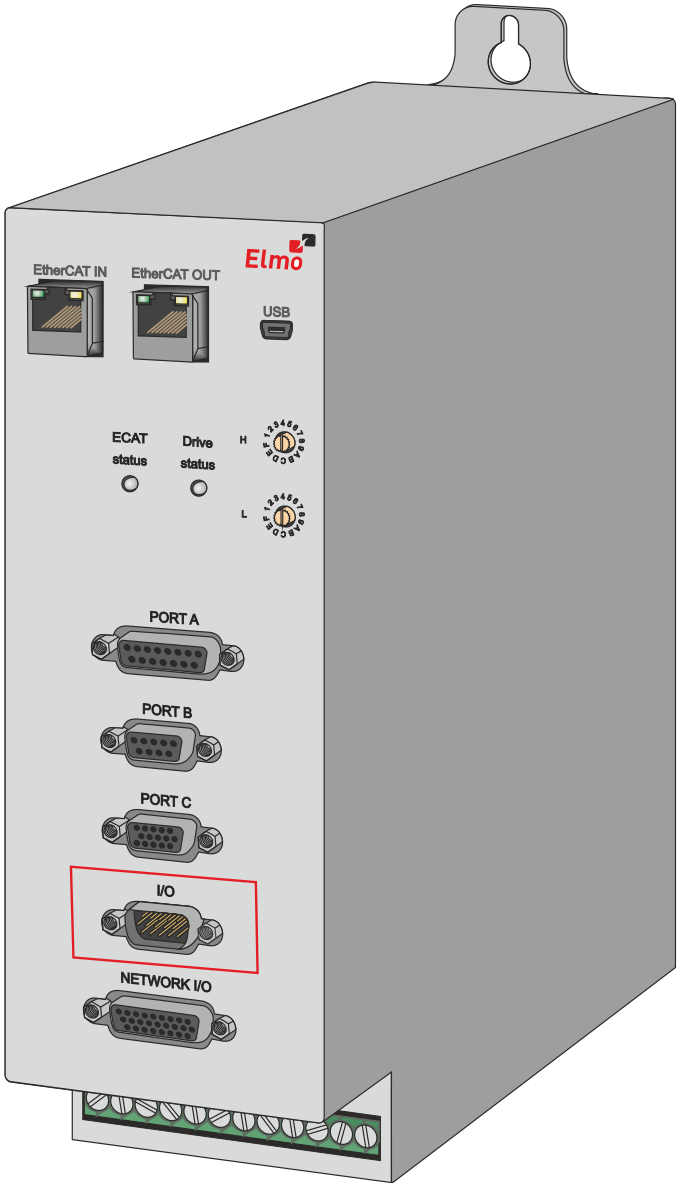

G-TUBA056A

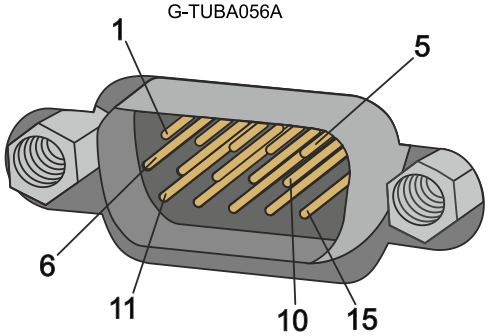

G-TUBA059A

15-Pin High Density D-Type Male Connector

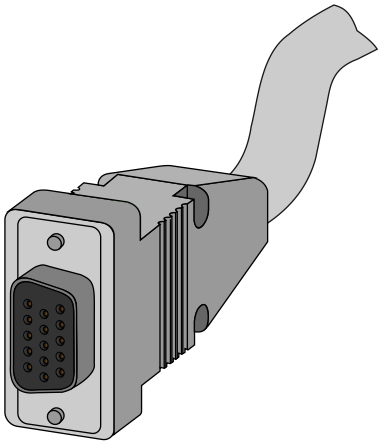

G-BAS082A

15-Pin High Density D-Type Female Connector

Table 5: I/O Connector Pin Assignments

7.9.1. Digital Input and Output TTL Mode

The following figure describes the connections at the I/O Port for the Digital Input and Output TTL Mode.

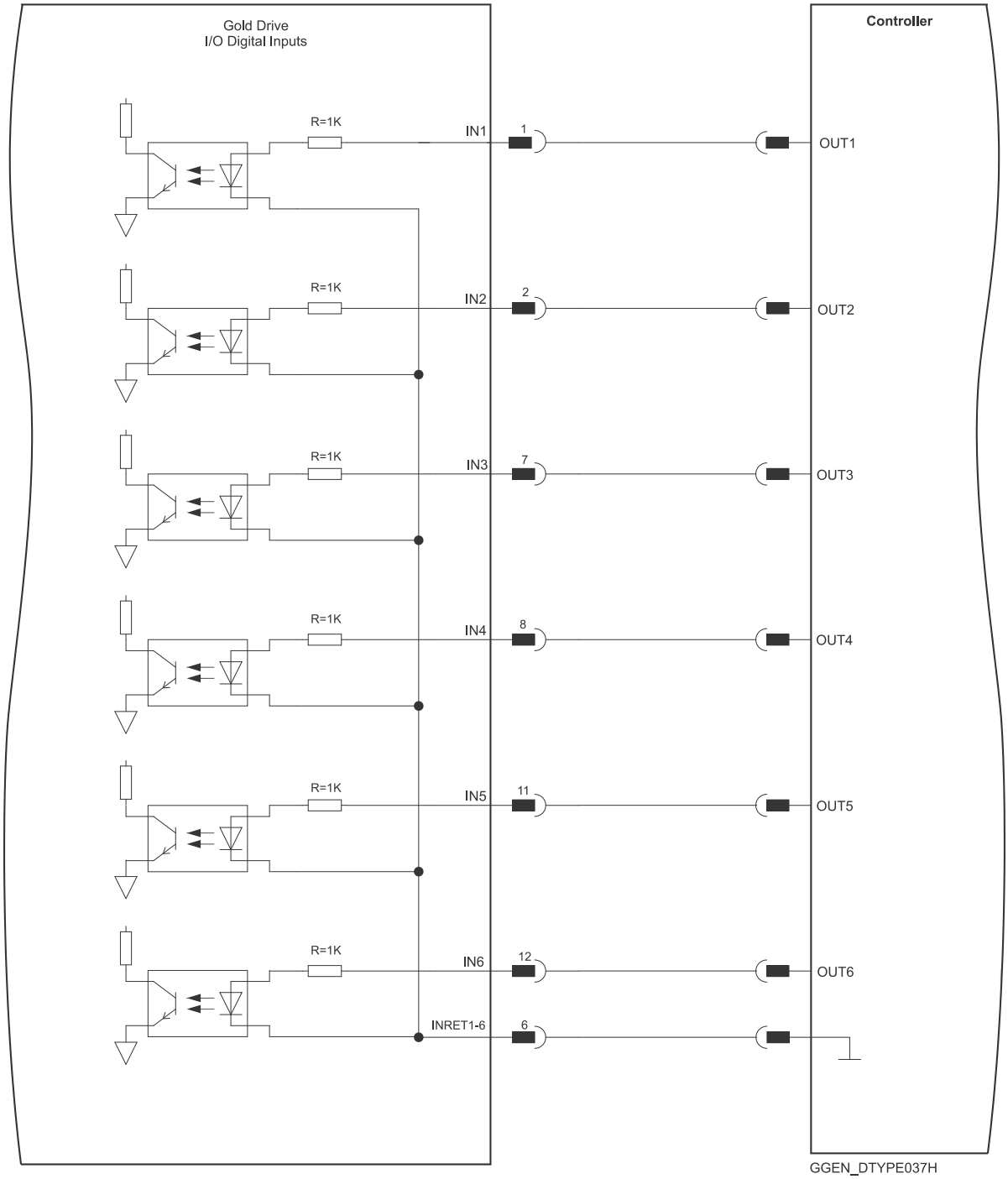

Figure 28: Digital Input TTL Mode D-Type Connection Diagram

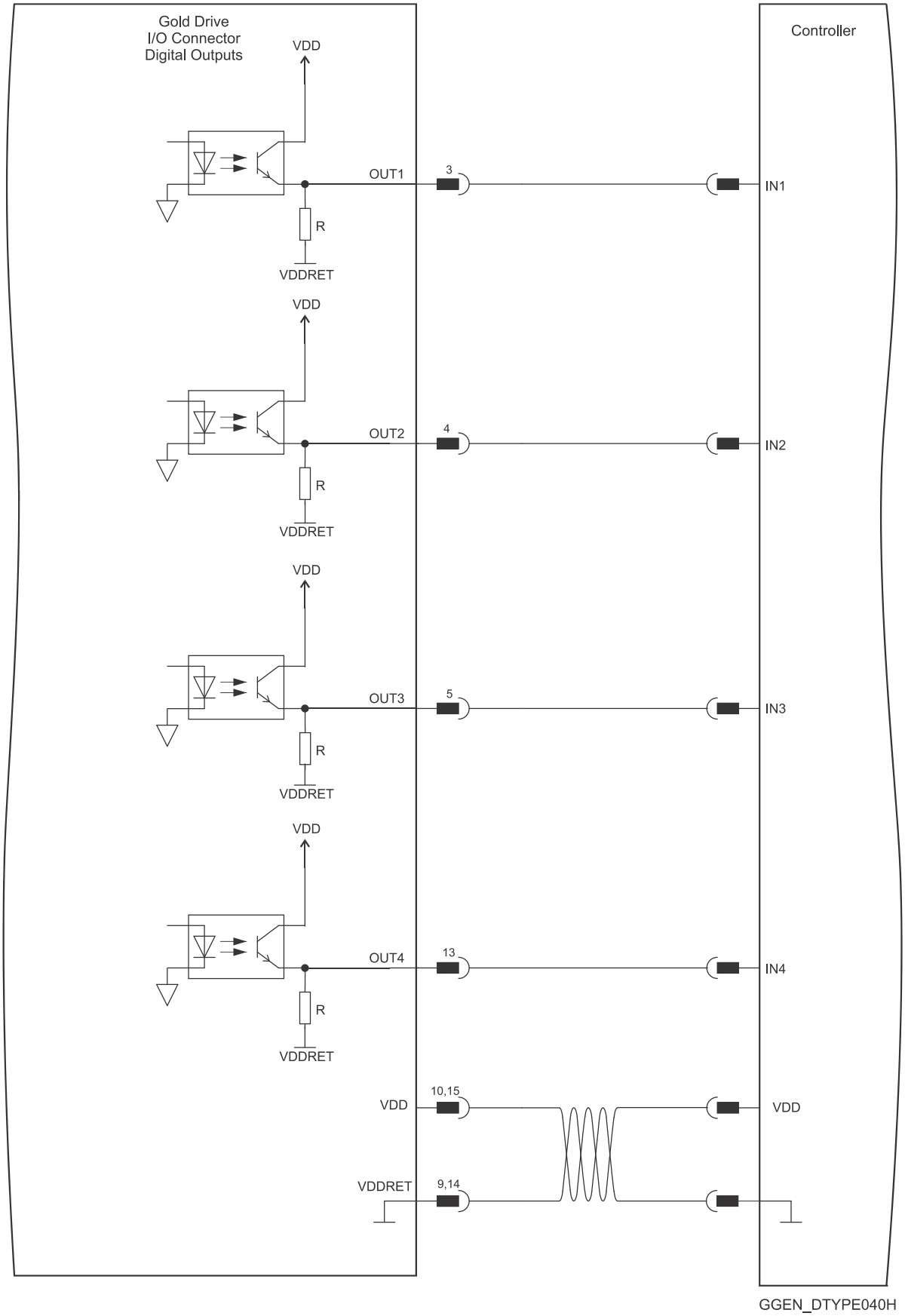

Figure 29: Digital Output D-Type Connection Diagram – TTL Option

7.9.2. Digital Input and Output PLC Source Mode

The following figure describes the connections at the I/O Port for the Digital Input and Output PLC Mode.

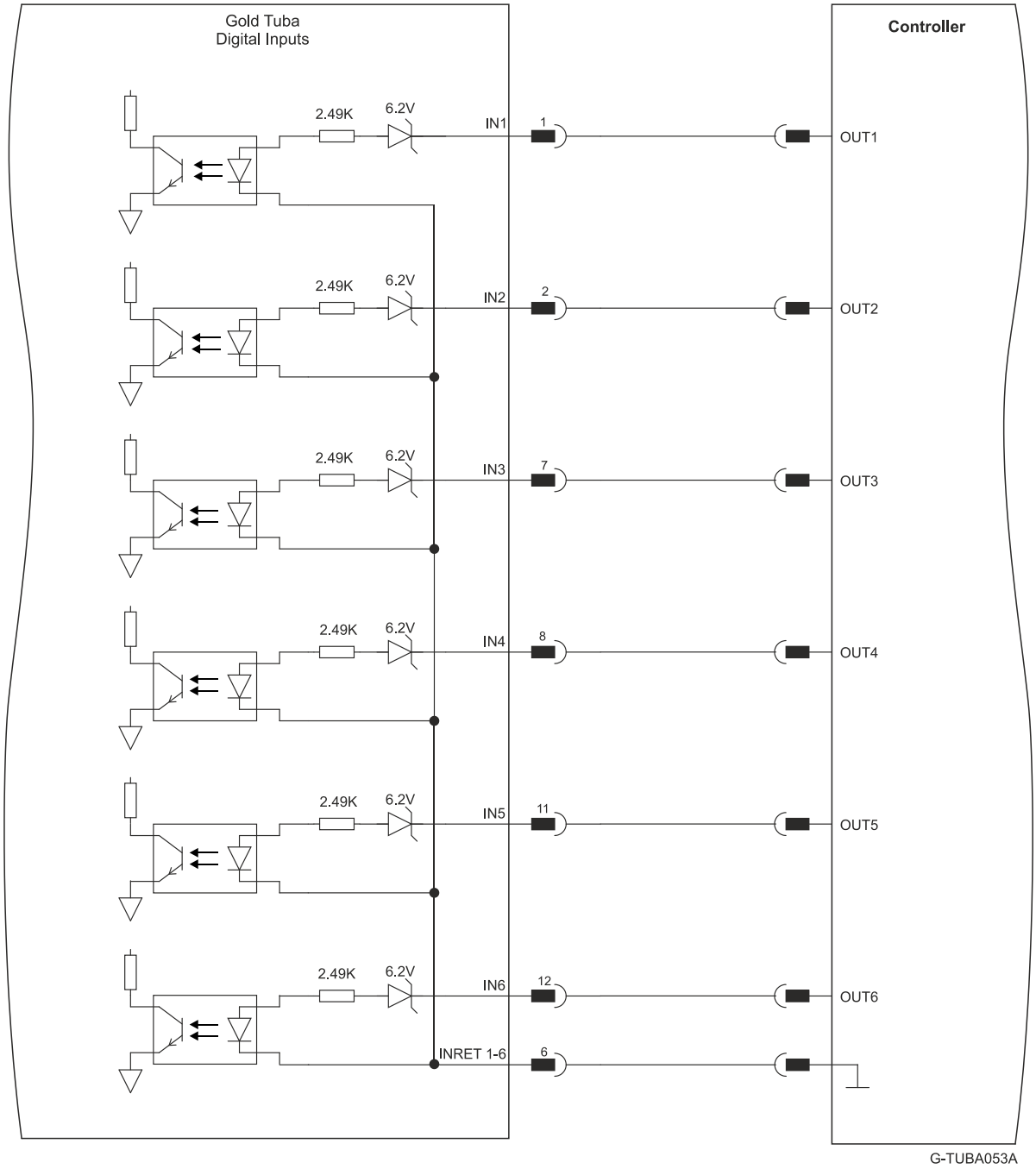

Figure 30: Digital Input D-Type Connection Diagram – Source PLC Option

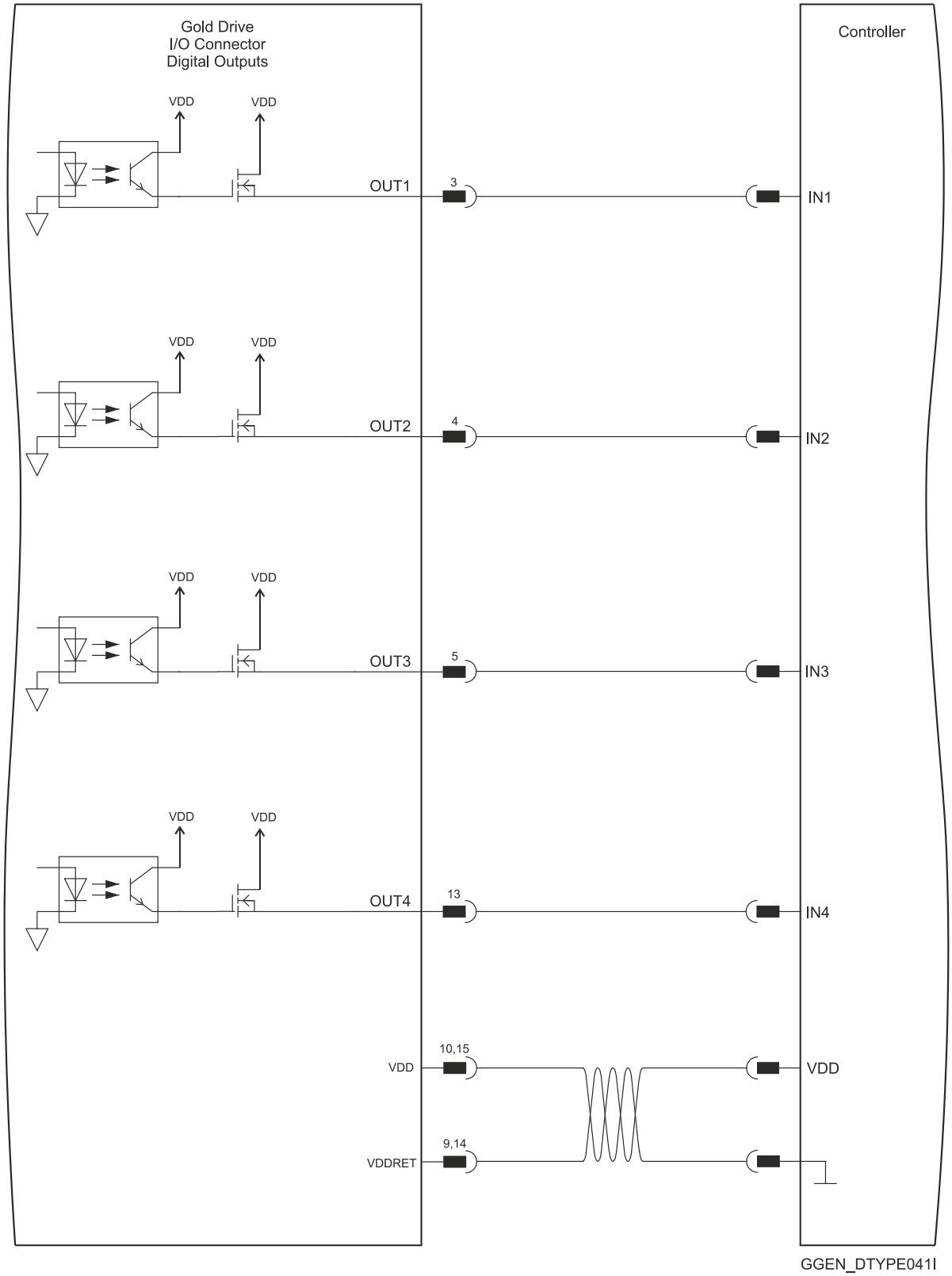

Figure 31: Digital Output D-Type Connection Diagram – Source PLC Option

7.9.3. Digital Input and Output Sink Mode

The following figure describes the connections at the I/O Port for the Digital Input and Output Sink Mode.

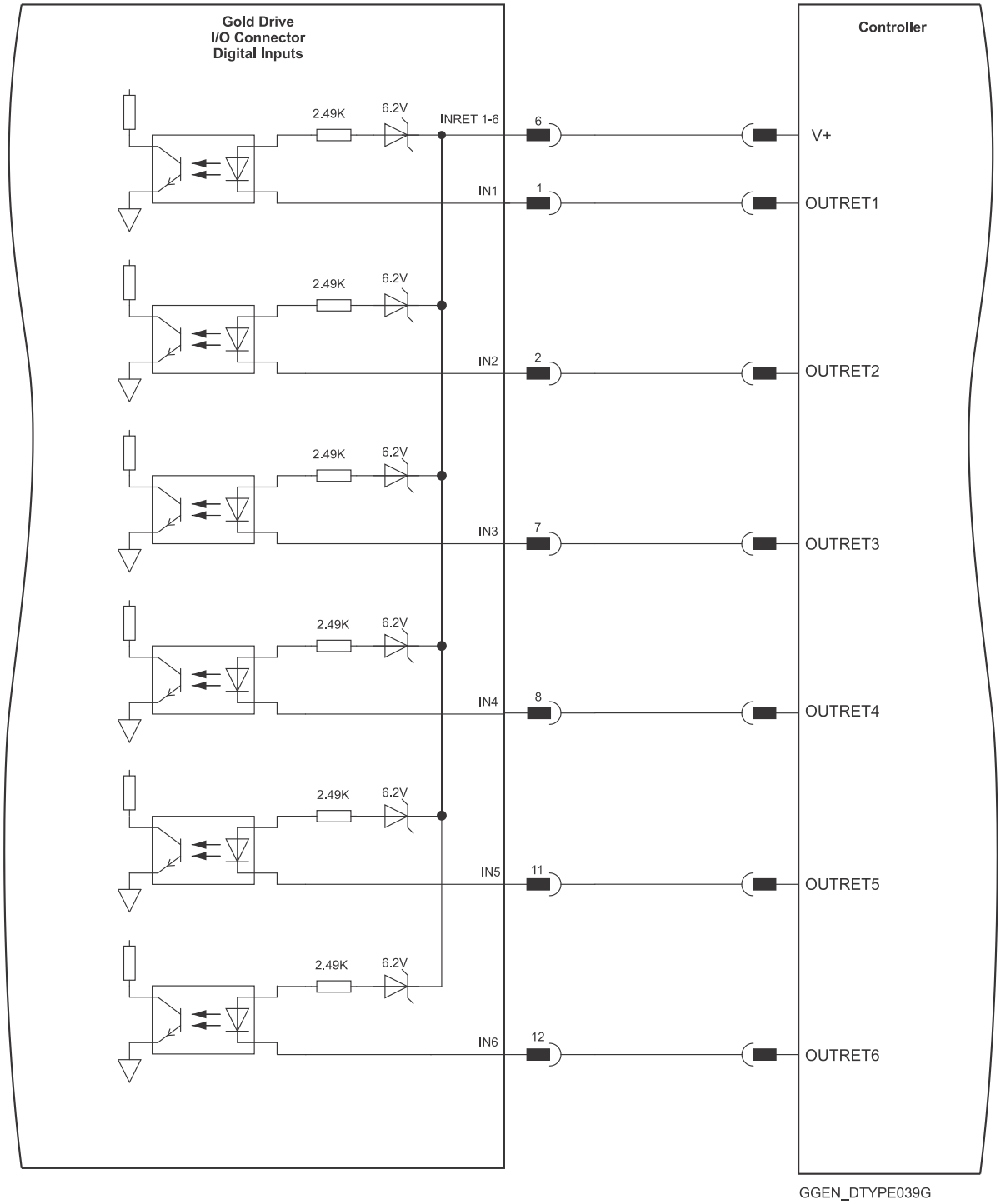

Figure 32: Digital Input Sink Mode – PLC voltage level D-Type Connection Diagram

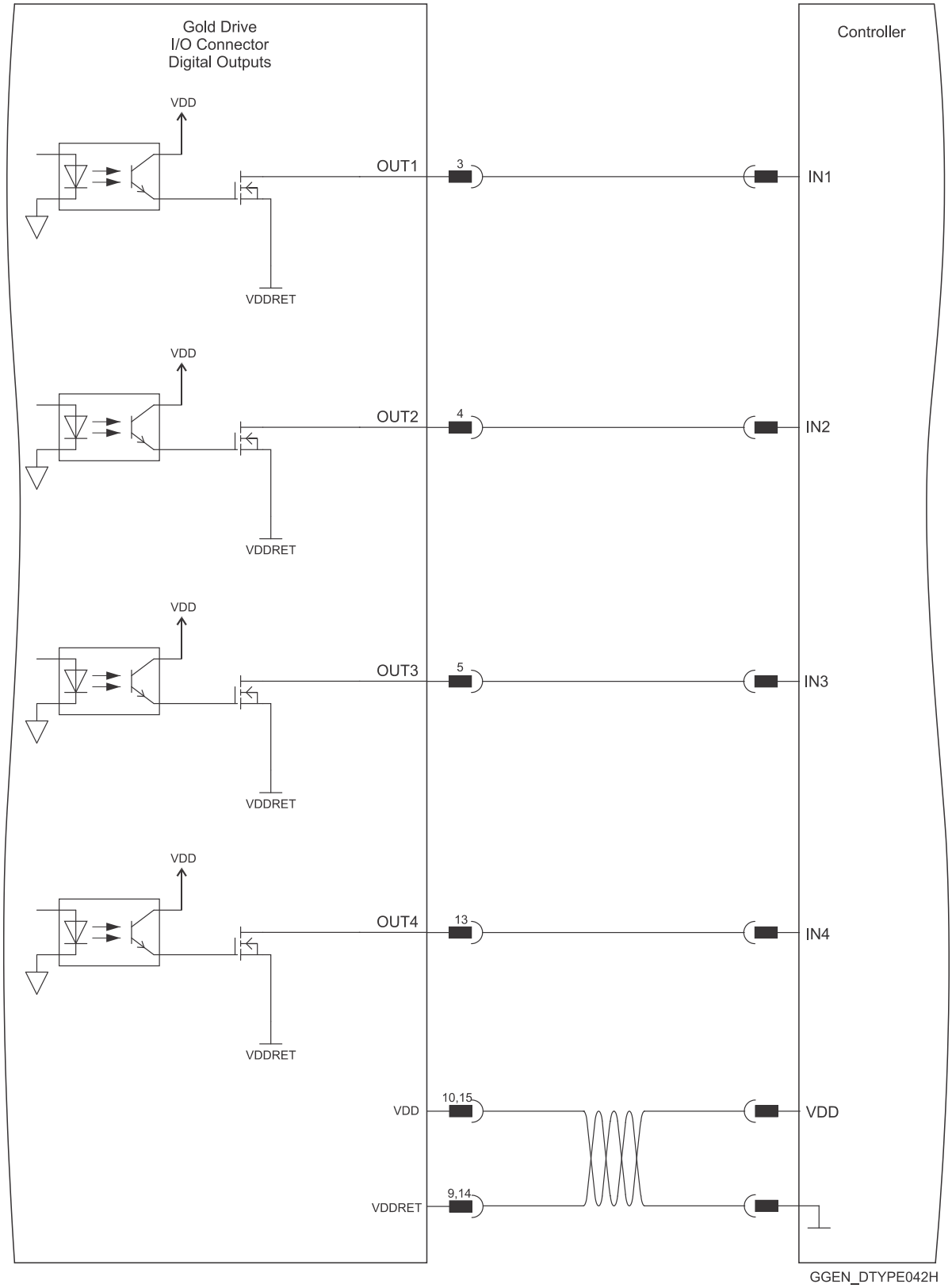

Figure 33: Digital Output as Sink Configuration D-Type Connection Diagram

7.10. USB 2.0

See Section 12.1 in the MAN-G-Panel Mounted Drives Hardware manual for full details.

Pin on USB	Signal	Function
1	USB VBUS	USB VBUS 5V Detector
2	USBD-	USB _N line
3	USBD+	USB _P line
5	USB COMRET	USB communication return
Pin Positions		

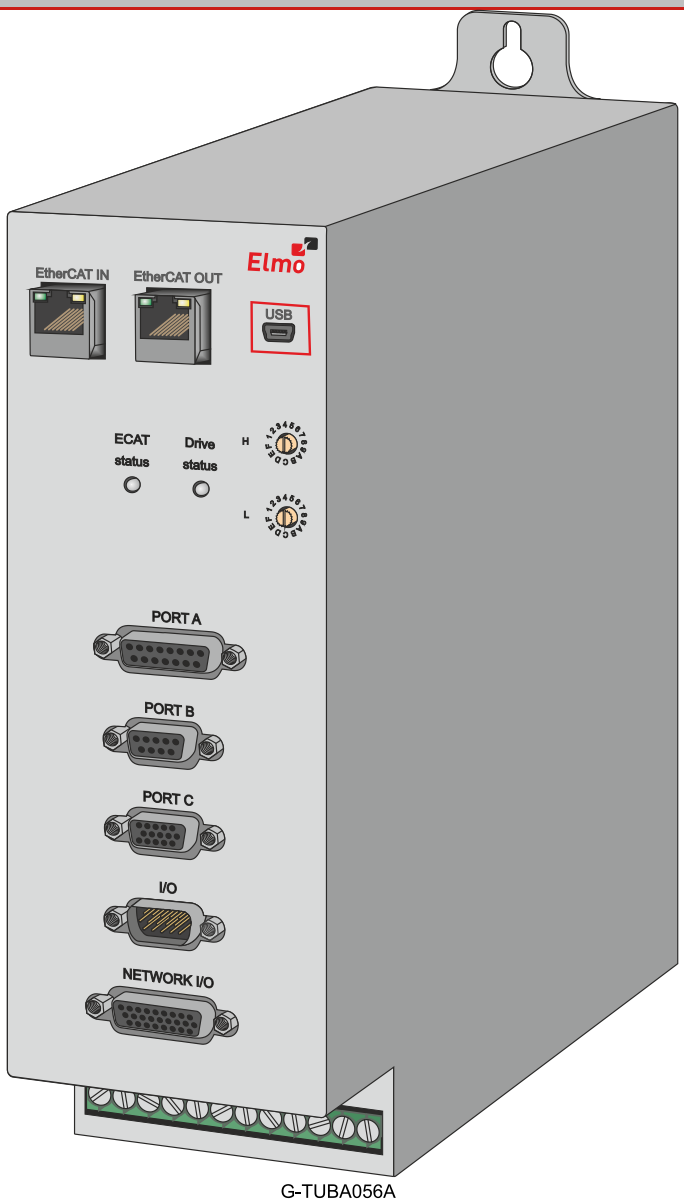

USB Mini B Connecter

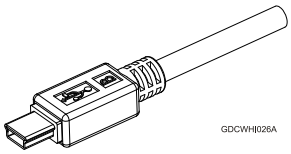

USB Device Mini B Plug

Table 6: USB 2.0 Pin Assignments

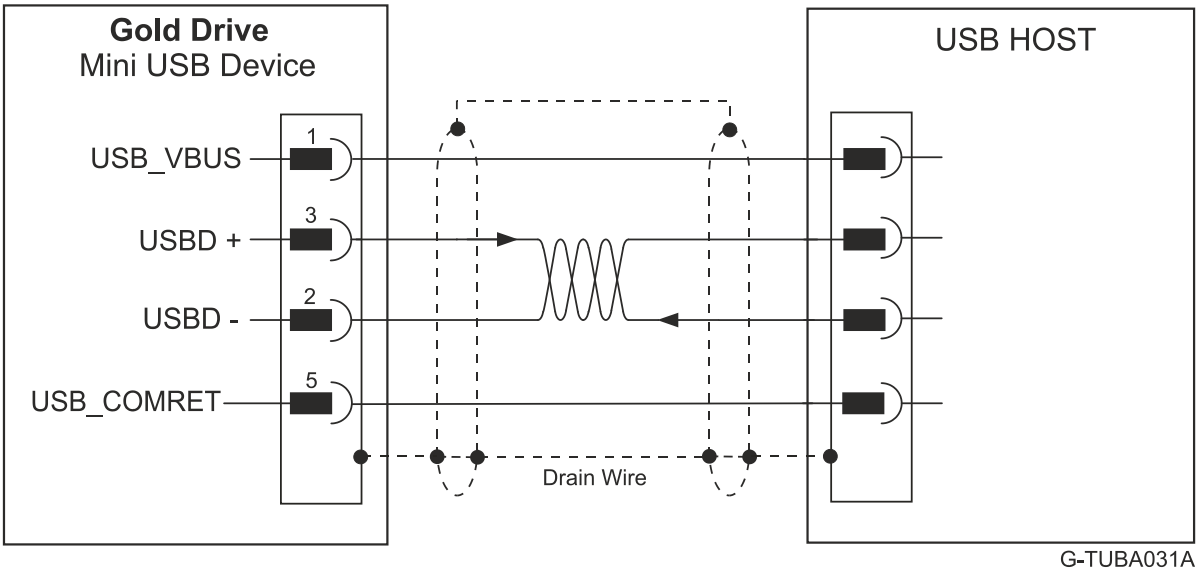

Figure 34: USB Network Diagram

7.11. Network I/O

The following table lists the Gold Tuba network I/O pin assignments.

Note: This option is only present in **G-TUB**XX/YYYXXX**E**X type.

Network I/O Pins	Signal	Function
1	EXT_IN1	Extended I/O Input 1
2	EXT_IN2	Extended I/O Input 2
3	EXT_IN3	Extended I/O Input 3
4	EXT_IN4	Extended I/O Input 4
5	EXT_IN5	Extended I/O Input 5
6	EXT_IN6	Extended I/O Input 6
7	EXT_IN7	Extended I/O Input 7
8	EXT_IN8	Extended I/O Input 8
9	EXT_IN9	Extended I/O Input 9
10	ANALRET2	Analog Input 2 Return
11, 12	VDDRET	Supply Return for Extended Out 1-6
13, 14	VDD_IN	Supply for Extended Out 1-6
15	INRET1-12	Extended Inputs 1-12 Return for the **S/T** version
		Positive Extended Inputs 1-12 for the **H** version
16	EXT_IN10	Extended I/O Input 10
17	EXT_IN11	Extended I/O Input 11
18	EXT_IN12	Extended I/O Input 12
19	ANALOG2-	Analog Input 2 -
20	ANALOG2+	Analog Input 2 +
21	EXT_OUT1	Extended OUT 1
22	EXT_OUT2	Extended OUT 2
23	EXT_OUT3	Extended OUT 3
24	EXT_OUT4	Extended OUT 4
25	EXT_OUT5	Extended OUT 5
26	EXT_OUT6	Extended OUT 6

Pin Positions

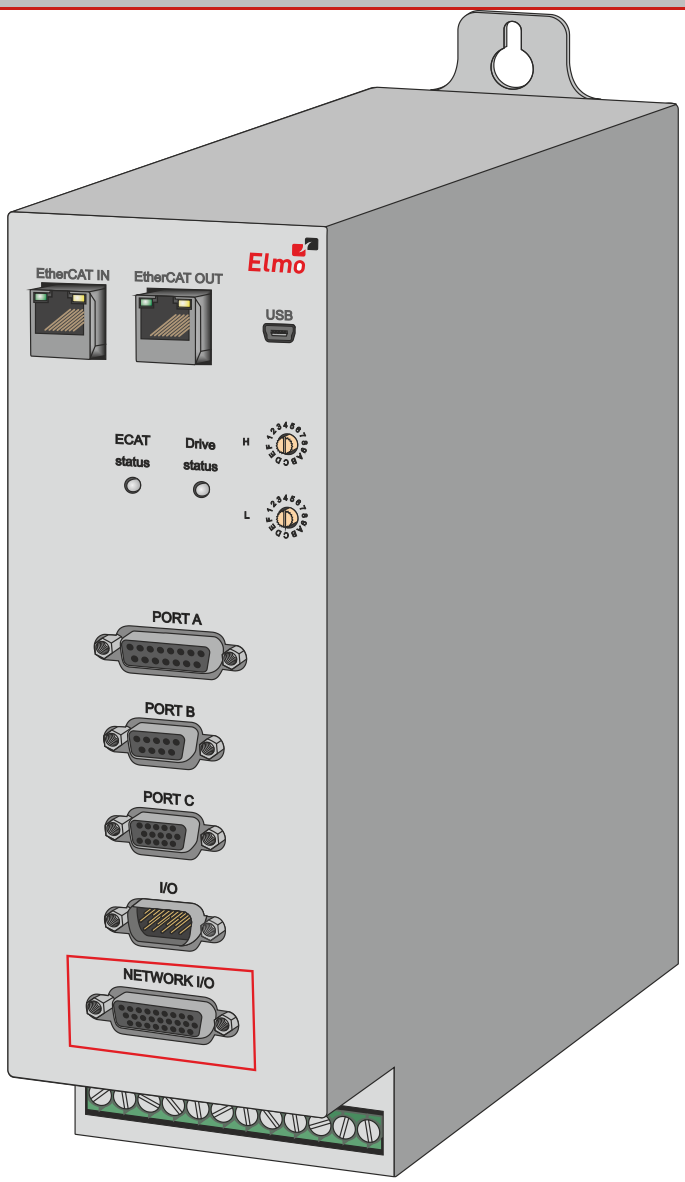

G-TUBA056A

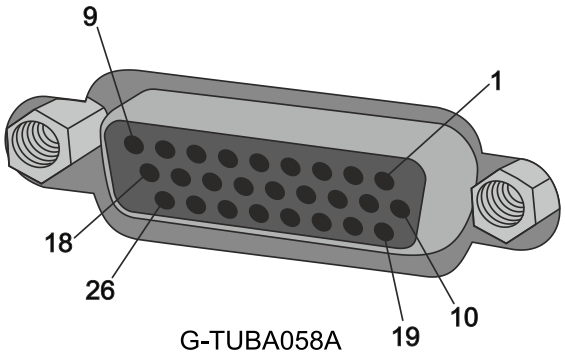

G-TUBA058A

26-Socket High Density D-Type Connector

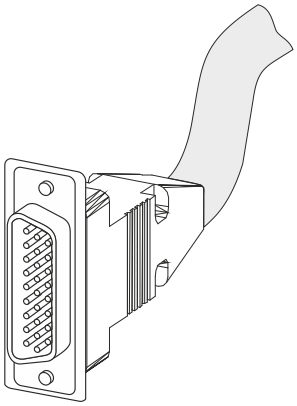

GGEN003A

26-Pin High Density Male Connector

7.11.1. Digital Input

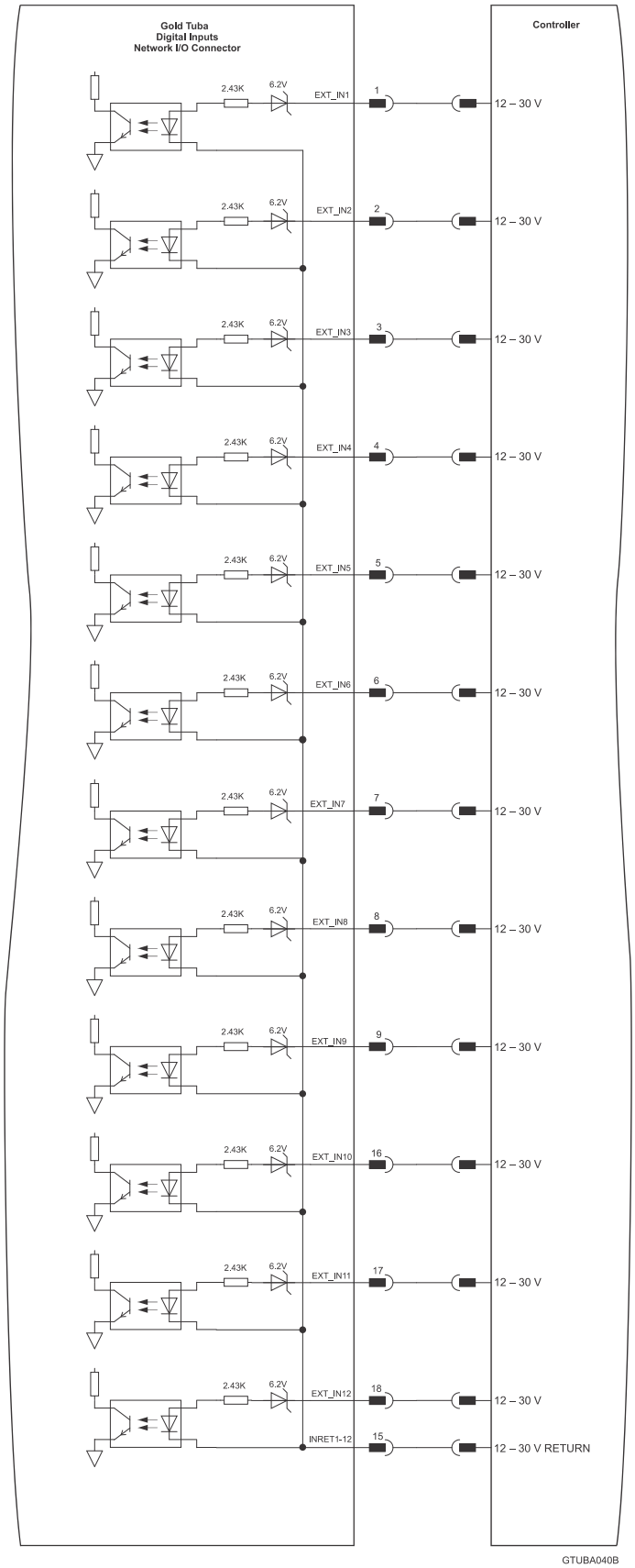

Figure 35: Network I/O Digital Input PLC Mode Connection Diagram – for G-TUBXX/YYYXXSEX

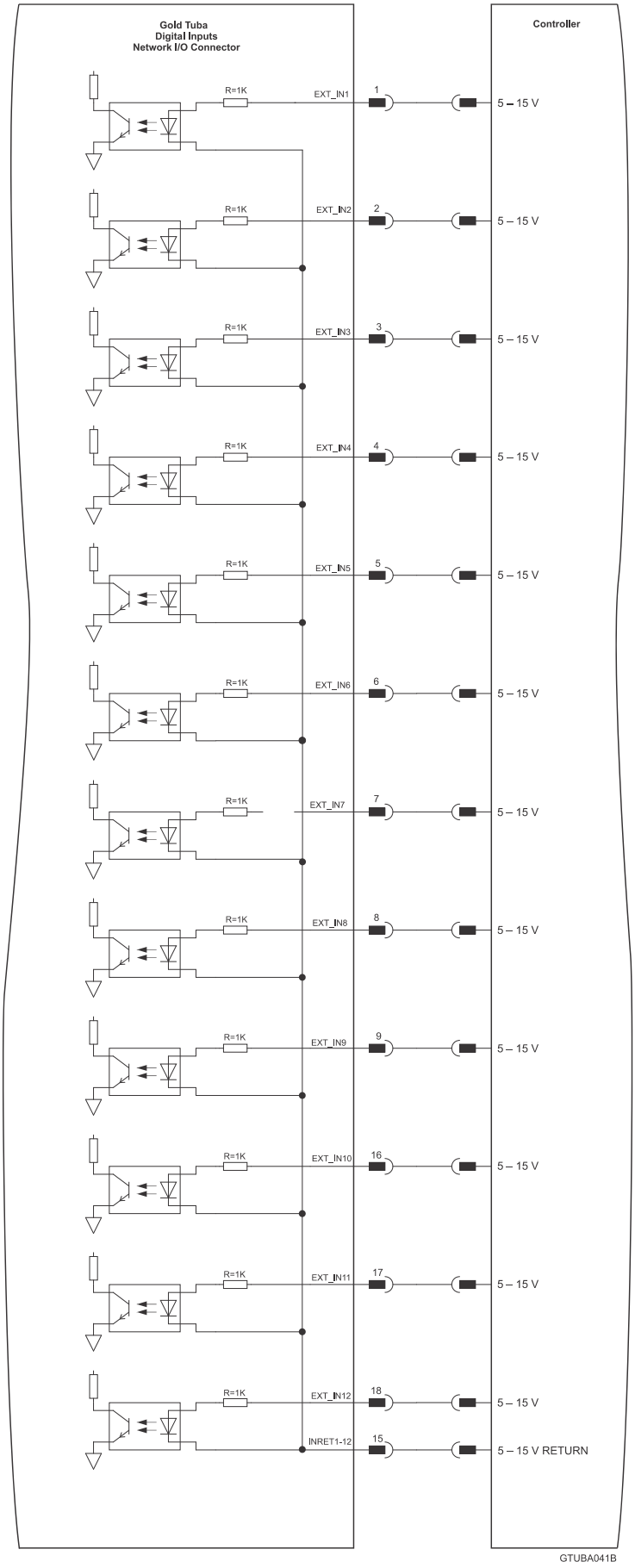

Figure 36: Network I/O Digital Input TTL Mode Connection Diagram, for G-TUBXXX/YYYXXTEX

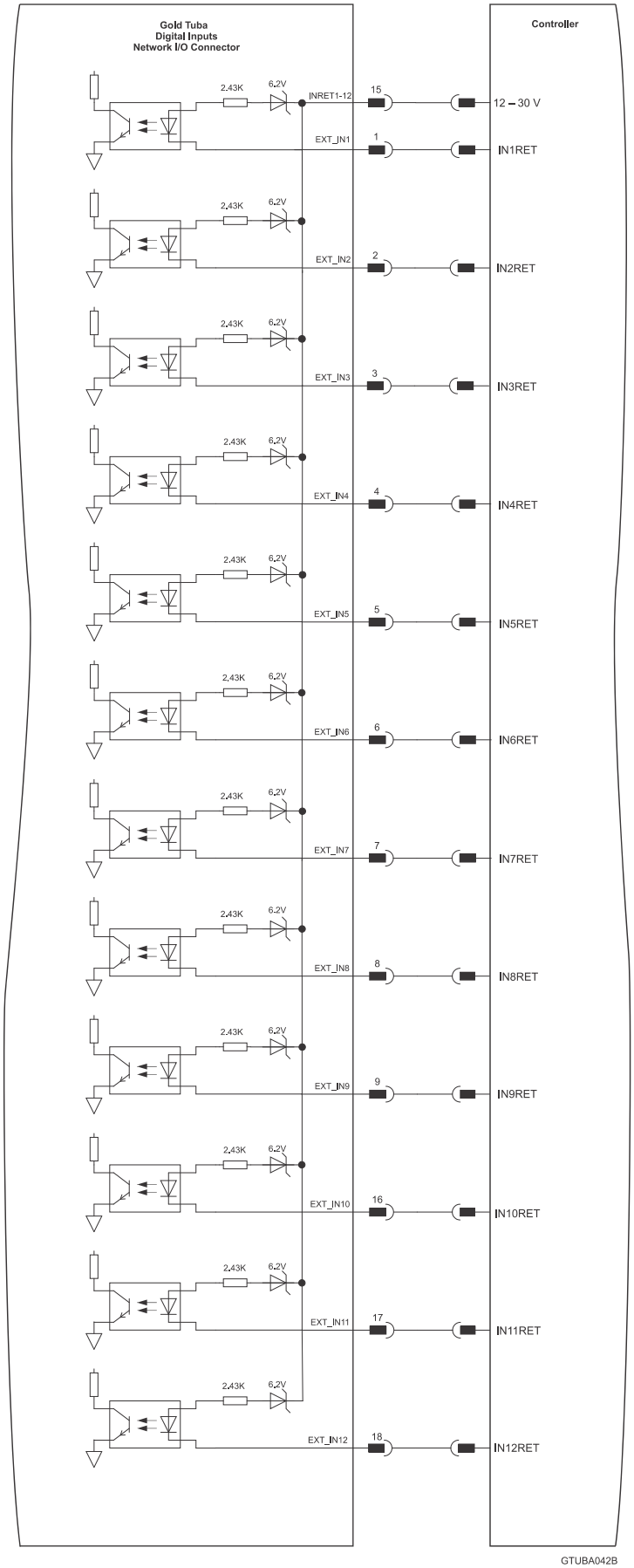

Figure 37: Network I/O Digital Input H Mode Connection Diagram - G-TUBXXX/YYYXXHEX

7.11.2. Digital Output

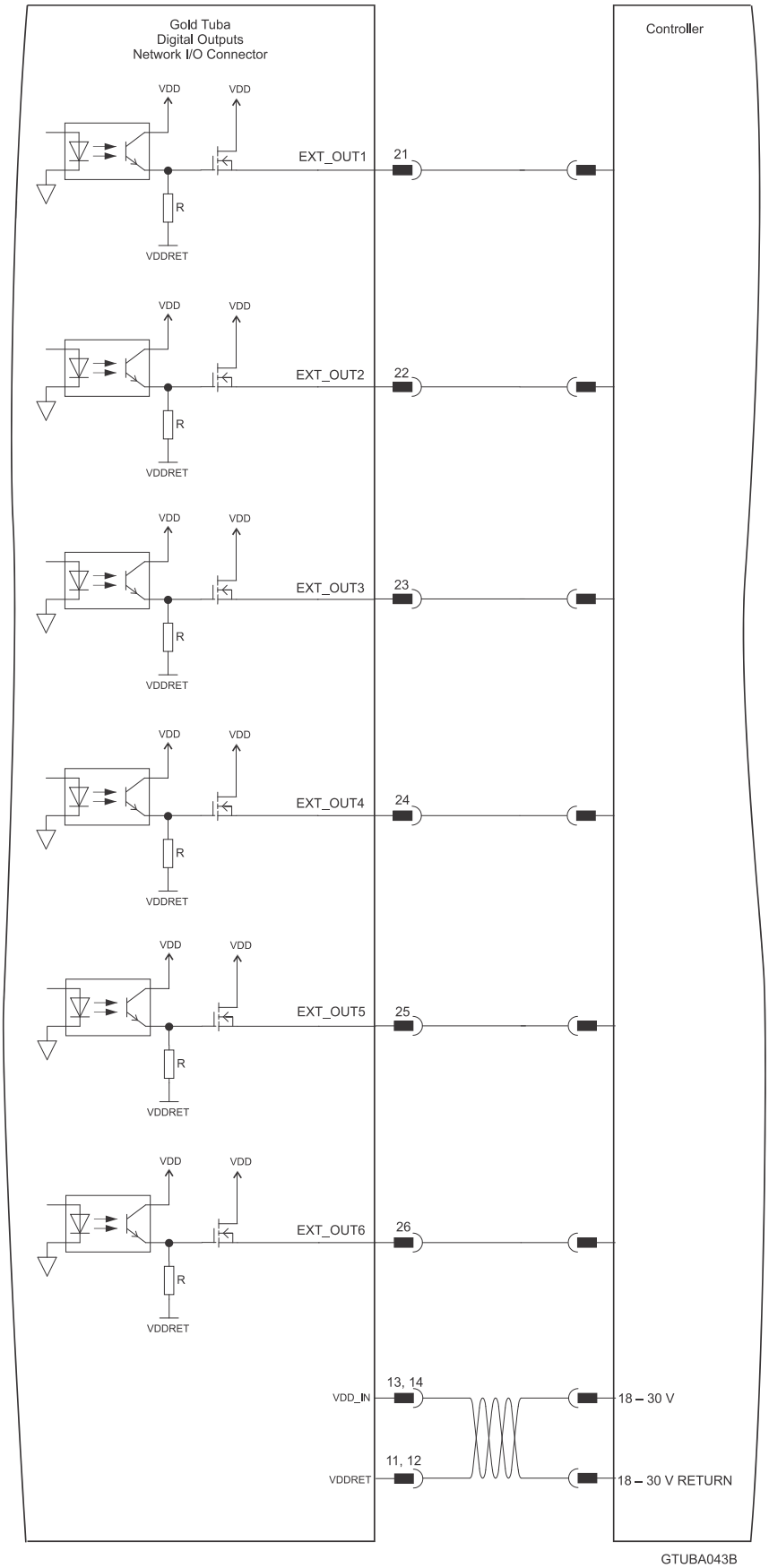

Figure 38: Network I/O Digital Output Connection Diagram – PLC Option, for G-TUBXX/YYYXXSEX

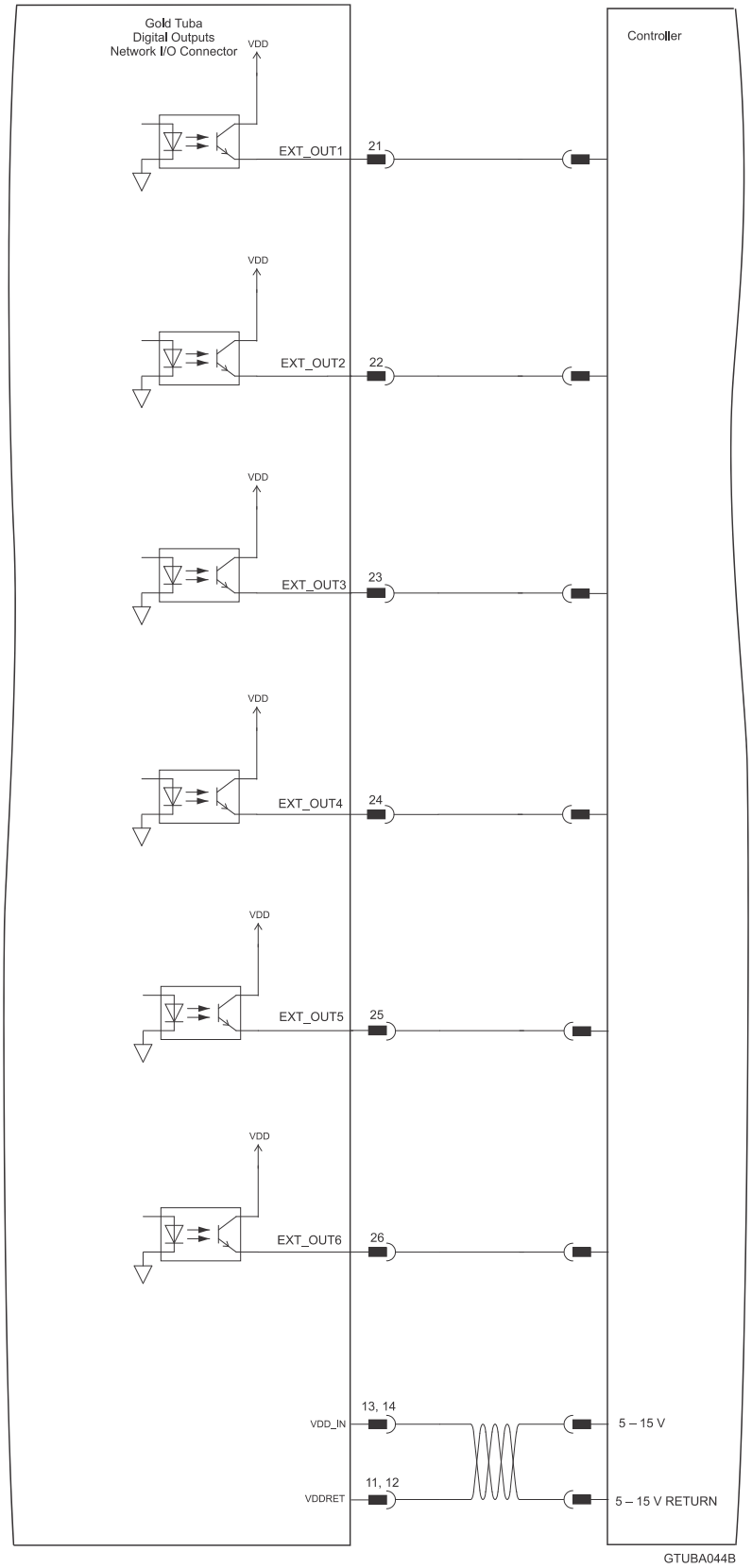

Figure 39: Network I/O Digital Output Connection Diagram – TTL Option, for G-TUBXX/YYYXXTEX

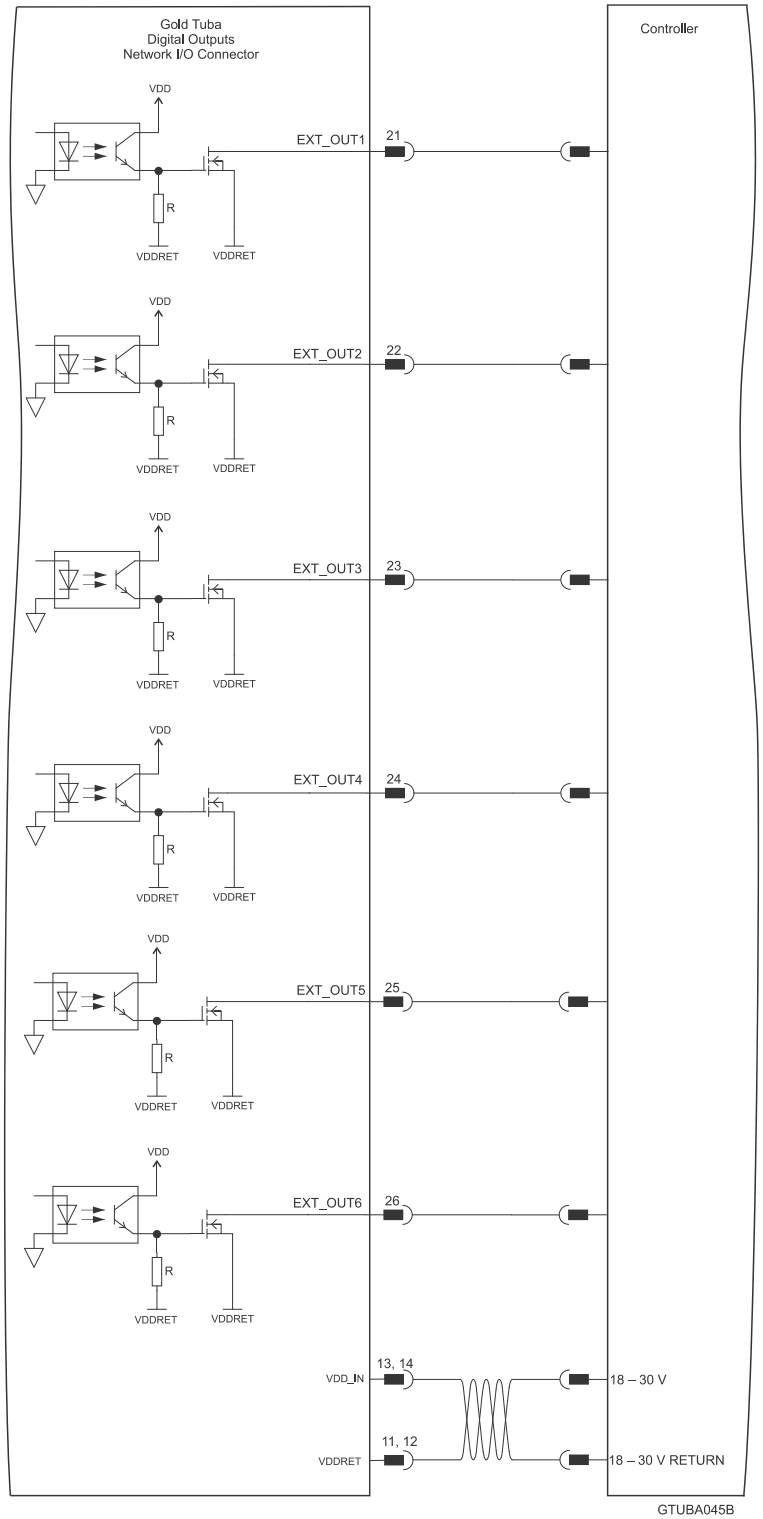

Figure 40: Network I/O Digital Output Connection Diagram – H Option - G-TUBXXX/YYYXXHEX

7.12. Smart Fan

The Smart FAN algorithm starts working when the internal heat-sink temperature reaches 60°C or when the Shunt Resistor overheats.

7.13. Drive Status Indicator

The Gold Tuba is equipped with several light-emitting diode (LED) indicators.

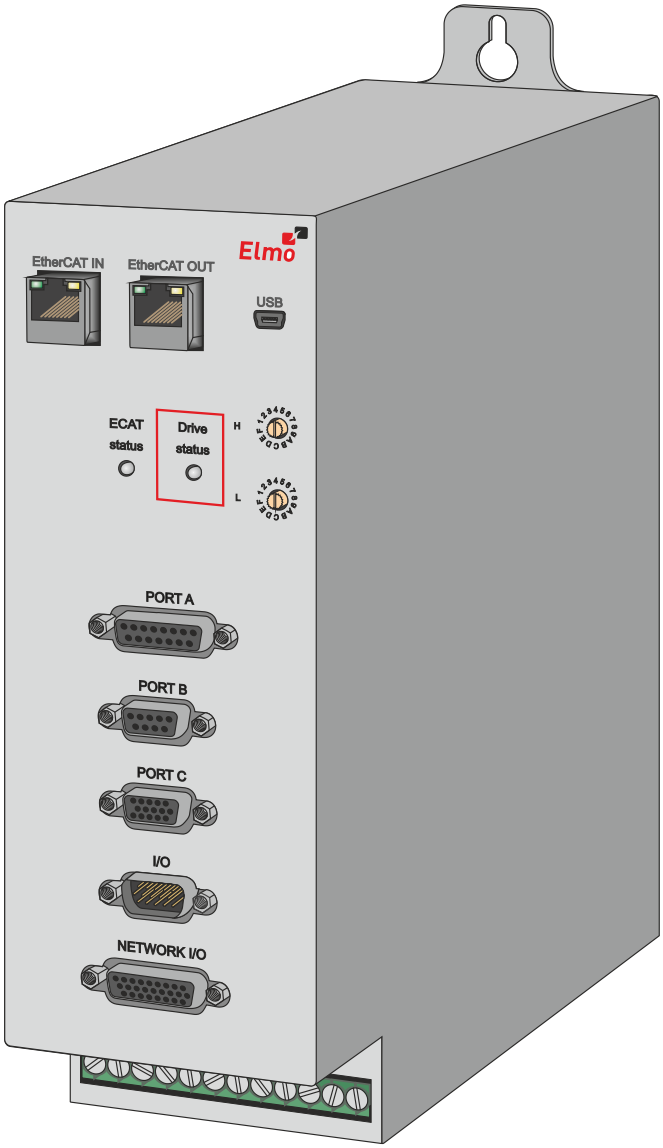

G-TUBA056A

The red/green dual LED is used for immediate indication of the following states:

- **Initiation state:** In this state the LED indicates whether the drive is in the boot state (blinking red) or in the operational state (steady red).
- **Working state:** In this state the LED indicates whether the drive is in an amplifier failure state (red) or is ready to enable the motor (green).

7.14. EtherCAT Communications Version

Fieldbus communications are industrial network protocols for real-time distributed control that allows connection of servo drives. The Gold Tuba with the following Product Number supports EtherCAT fieldbus industrial network protocol.

Fieldbus Type	Product Number
EtherCAT	**G-TUB**XX/YYY**E**XXXX
EtherCAT + switches	**G-TUB**XX/YYY**F**XXXX

7.14.1. EtherCAT IN/Ethernet Pinouts

See Section 12.2 in the MAN-G-Panel Mounted Drives Hardware manual for the electrical diagram.

Pin on EtherCAT IN	Signal	Function
1	EtherCAT_IN_TX+/Ethernet_TX+	EtherCAT in transmit+/Ethernet transmit +
2	EtherCAT_IN_TX-/Ethernet_TX-	EtherCAT in transmit-/Ethernet transmit -
3	EtherCAT_IN_RX+/Ethernet_RX+	EtherCAT in receive+/Ethernet receive +
4/5	N/A	
6	EtherCAT_IN_RX-/Ethernet_RX-	EtherCAT in receive-/Ethernet receive -
7/8	N/A	

Pin Positions	
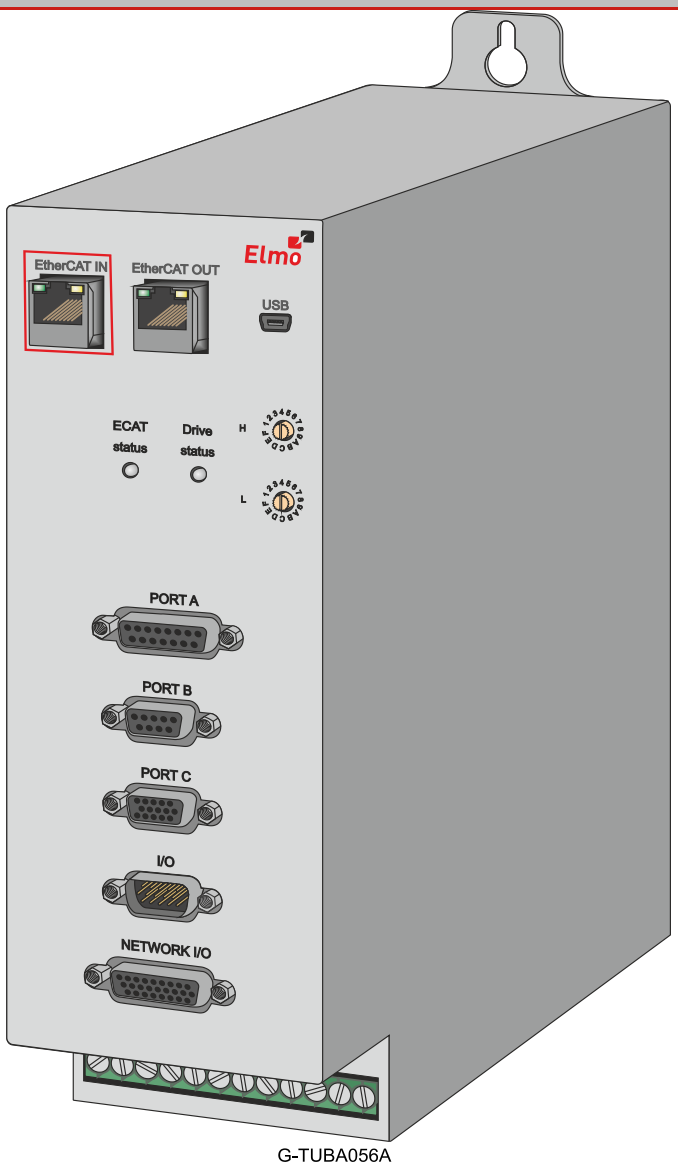 **RJ-45 Connector**	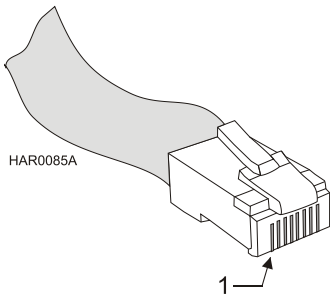 **Standard CAT5e Ethernet Cable**

Table 7: EtherCAT In/Ethernet Connector Pin Assignments

7.14.2. EtherCAT OUT Pinouts

See Section 12.2 in the MAN-G-Panel Mounted Drives Hardware manual for the electrical diagram.

Pin on EtherCAT OUT	Signal	Function
1	EtherCAT_OUT_TX+	EtherCAT out transmit +
2	EtherCAT_OUT_TX-	EtherCAT out transmit -
3	EtherCAT_OUT_RX+	EtherCAT out receive +
4/5	N/A	
6	EtherCAT_OUT_RX-	EtherCAT out receive -
7/8	N/A	
Pin Positions		

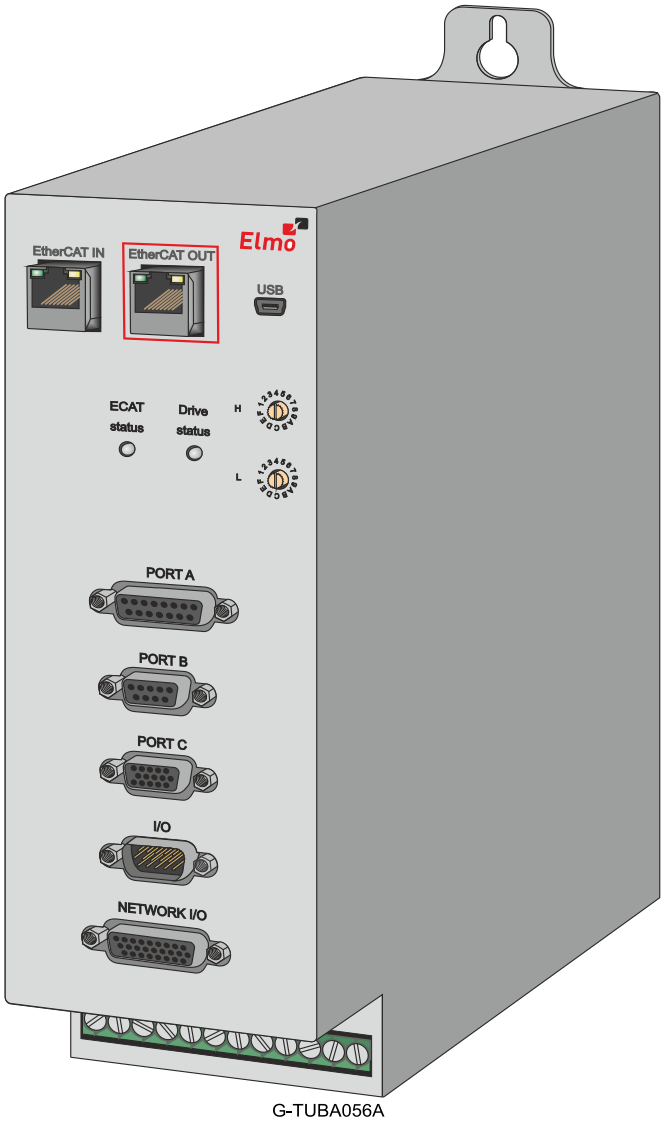

RJ-45 Connector

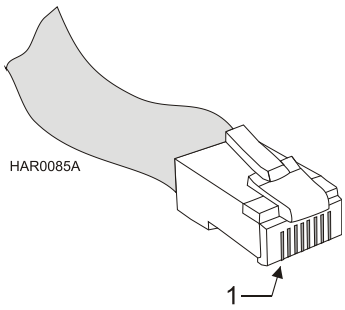

Standard CAT5e Ethernet Cable

Table 8: EtherCAT Out Connector Pin Assignments

7.14.3. EtherCAT Wiring

Figure 41 describes the wiring diagram for the EtherCAT connections.

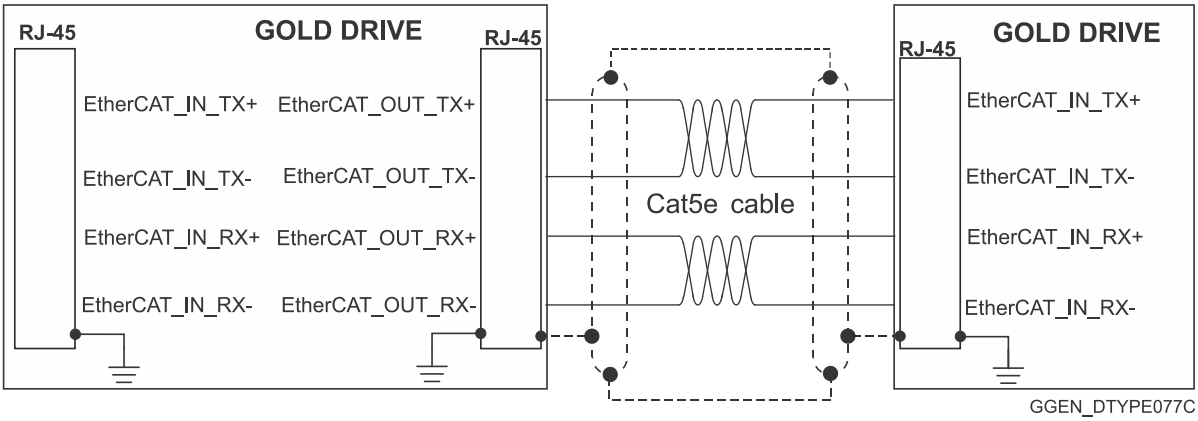

Figure 41: EtherCAT RJ-45 Connections

7.14.4. EtherCAT Link Indicators

The Gold Tuba can serve as an EtherCAT slave device. For this purpose it has two RJ-45 connectors, which are designated as EtherCAT In and EtherCAT Out. Each of these RJ-45 connectors has two status LEDs. For full details, see Section 12.2 in the MAN-G-Panel Mounted Drives Hardware manual.

7.14.5. EtherCAT Status Indicator

The EtherCAT status indicator is a red/green dual LED. It combines run indication (when it is green) and error indication (when it is red) of the EtherCAT device.

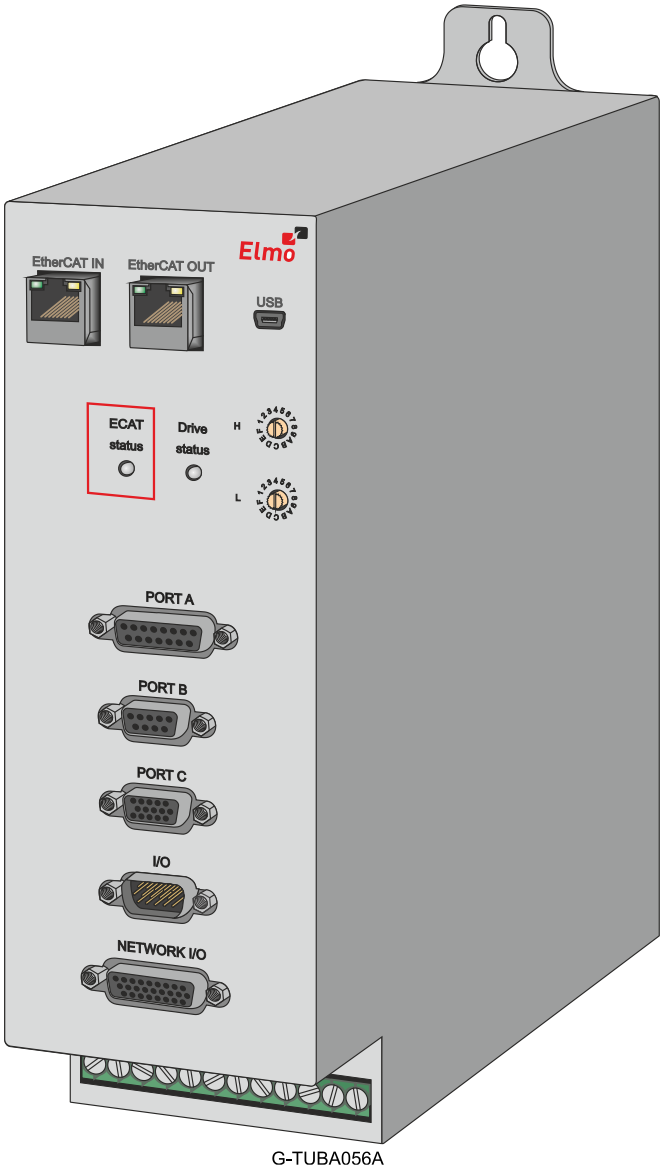

EtherCAT Status Indicator

7.14.6. EtherCAT Switches

Note: This option is only available in the **G-TUB**XX/YYY**F**XXXX type. The EtherCAT address of each axis is specified by the two EtherCAT switches. For full details, see Section 12.2 in the MAN-G-Panel Mounted Drives Hardware manual.

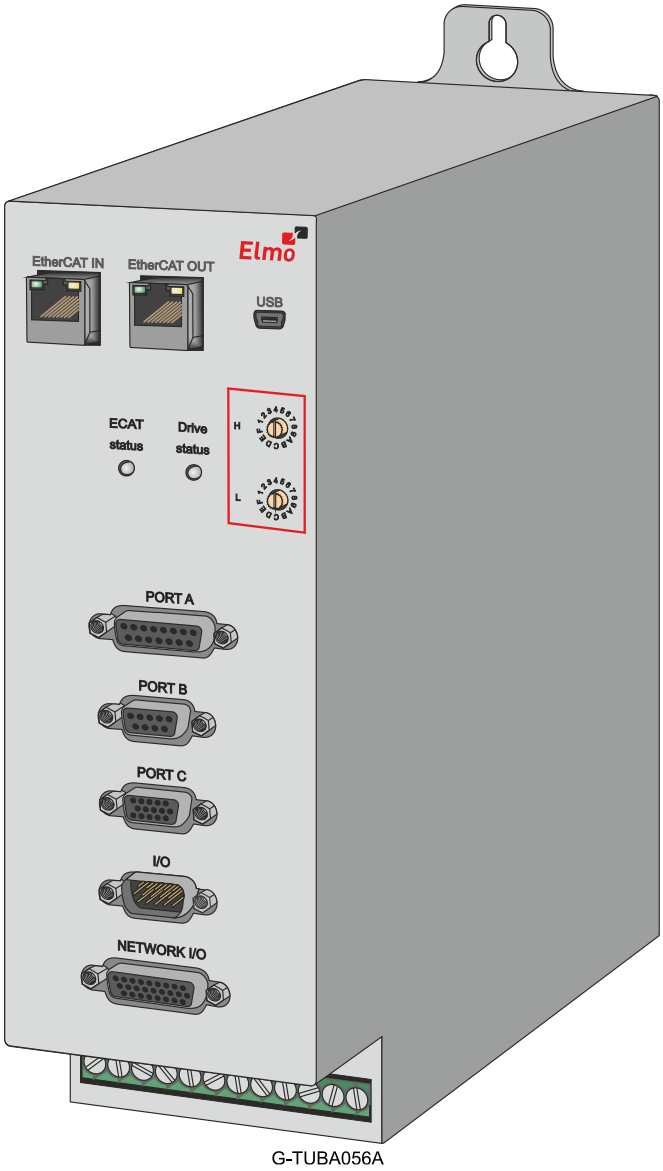

EtherCAT Switches

7.15. CAN Communications Version

Fieldbus communications are industrial network protocols for real-time distributed control that allows connection of servo drives. The Gold Tuba supports the following CAN fieldbus type industrial network protocol.

Fieldbus Type	Product Number
CAN	**G-TUB**XX/YYY**S**XXXX

See Section 12.4 in the MAN-G-Panel Mounted Drives Hardware manual for the electrical diagram.

Pin on CAN	Signal	Function
1	CAN_H	CAN_H bus line (dominant high)
2	CAN_L	CAN_L bus line (dominant low)
3	CAN_RET	CAN Return
4, 5	N/A	—
6	CAN_SHLD	Shield, connected to the RJ plug cover
7	CAN_RET	CAN Return
8	N/A	—

Pin on CAN	Signal	Function
Pin Positions		
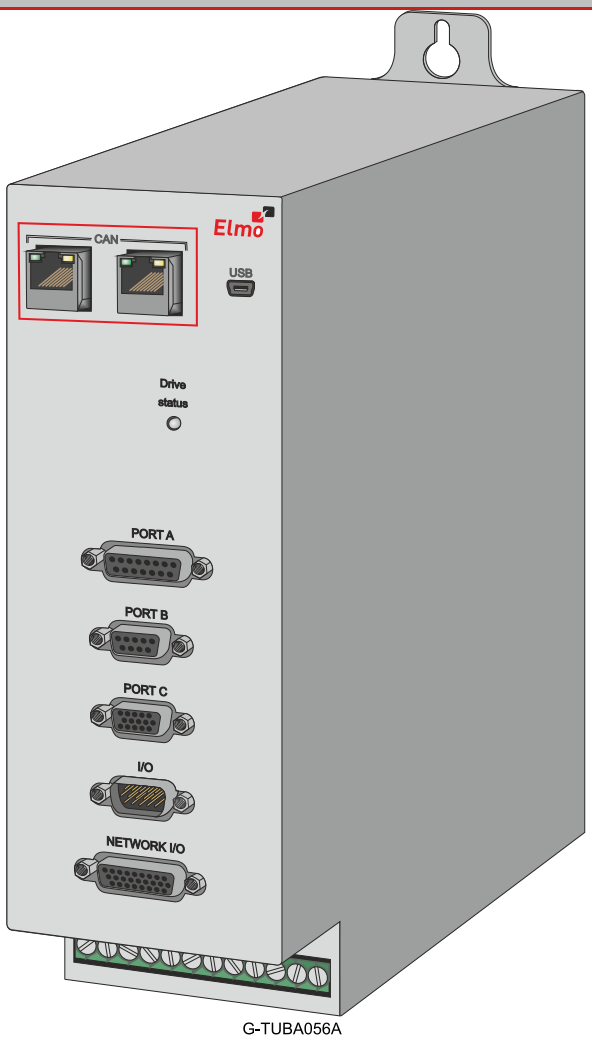 **RJ-45 Connector**		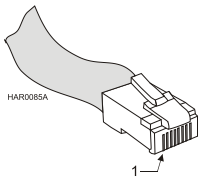 **Standard CAT5e Ethernet Cable**

Table 9: CAN In/Out Connector Pin Assignments

7.15.1. CAN Wiring

Figure 42 describes the CAN wiring diagram below.

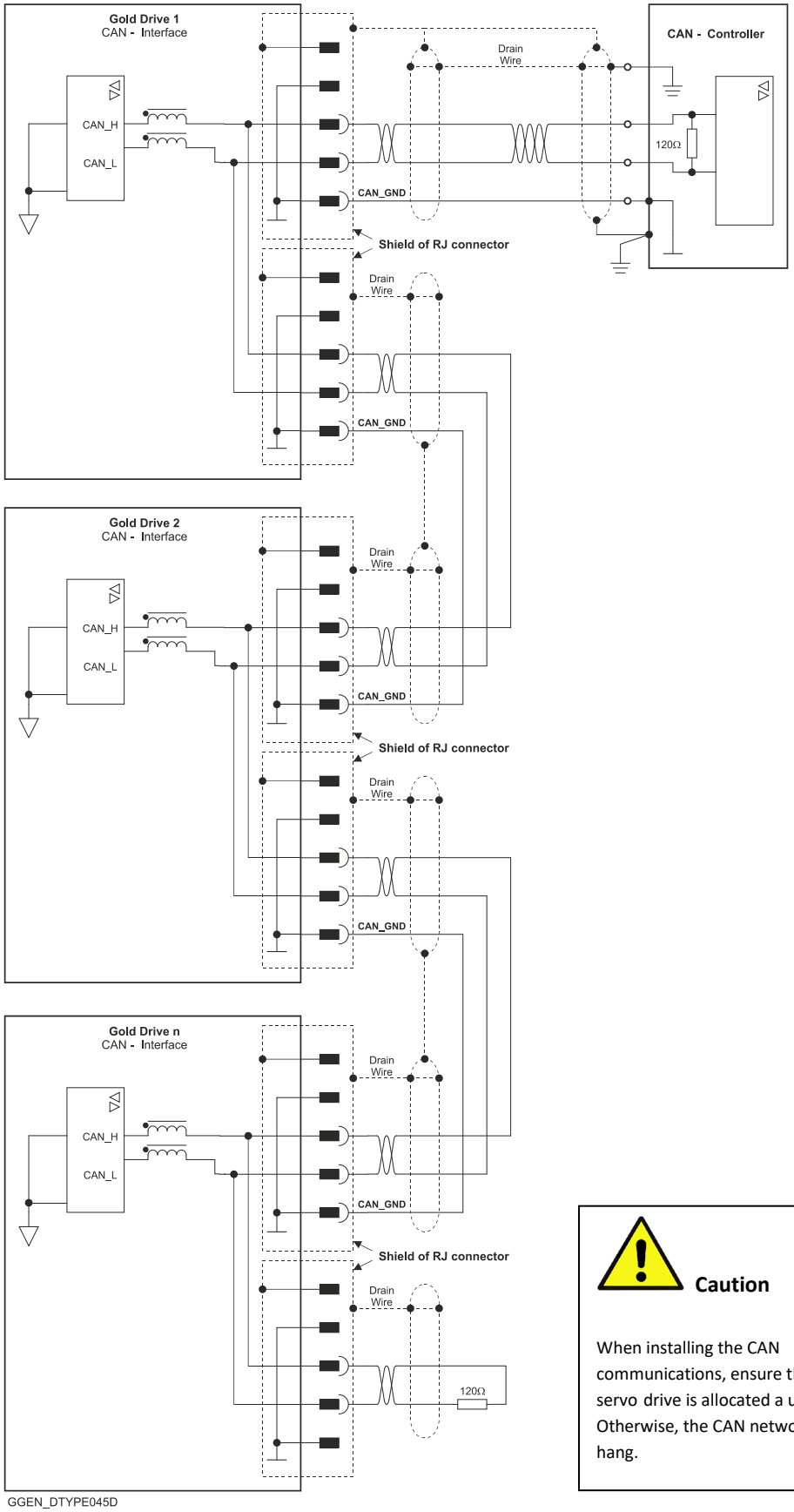

Caution

When installing the CAN communications, ensure that each servo drive is allocated a unique ID. Otherwise, the CAN network may hang.

Figure 42: Gold Tuba Connection Diagram – CAN

Chapter 8: Gold Tuba Heat Dissipation

Typical Servo Drive operation is characterized by high power peaks with relatively low average power consumption. In most cases, the average power is less than 15% - 25% of the consumed peak power.

When delivering power to the motor, the Servo Drive creates heat that must be carefully controlled to enable smooth and reliable enduring operation.

8.1. Power Dissipation

The integrated heat sink and fan of the Gold Tuba can dissipate up to 700W due to the nature of servo drive operation, whose high power peaks have very low average power consumption.

8.2. Heat Dissipation

The Gold Tuba is designed to dissipate its full power on the internal cooling elements. It is recommended to leave approximately 10 mm of space between the Gold Tuba's and any other assembly.

8.2.1. Gold Tuba Thermal Data

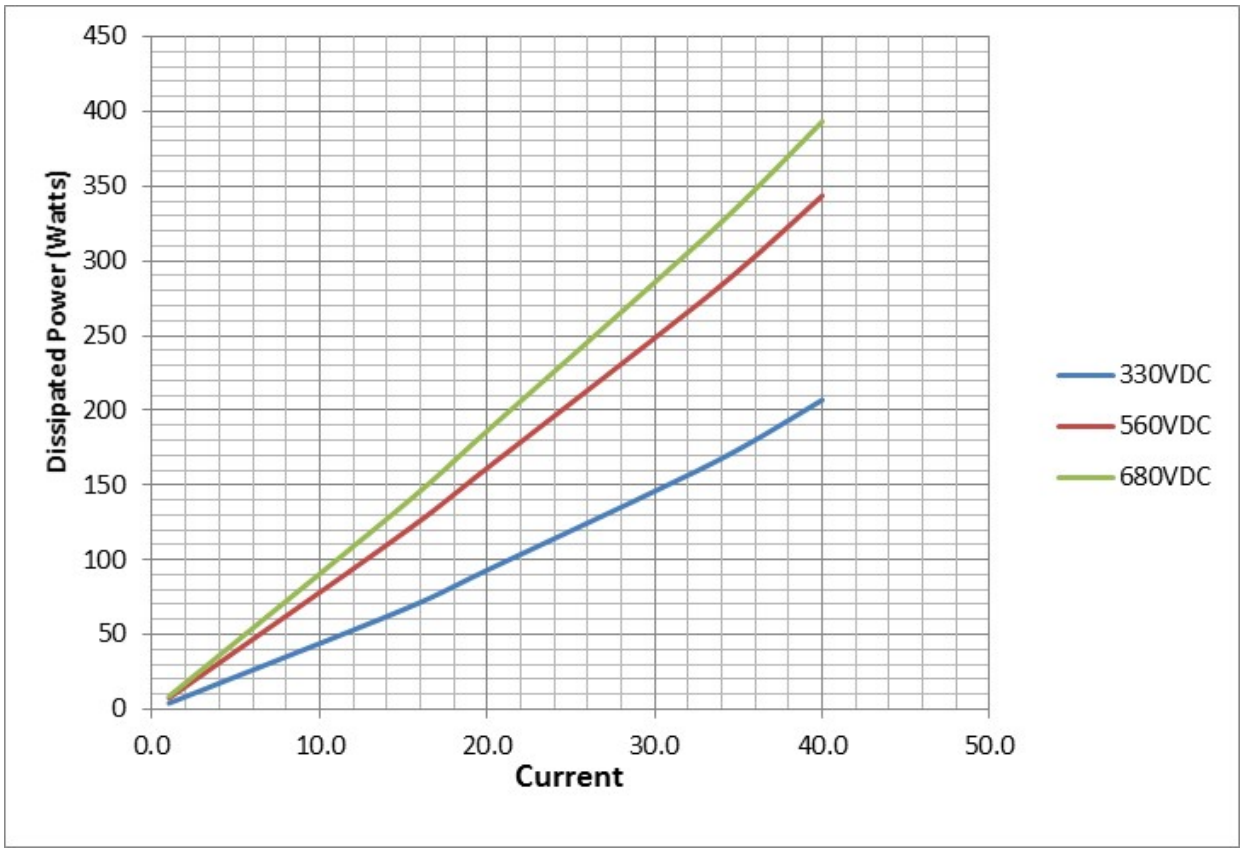

Figure 43: Power Dissipation for Gold Tuba types

8.2.2. How to Use the Charts

The power dissipation in the chart includes the losses of the rectifying bridge.
Regarding Figure 43, the following should be noted:

DC Bus Voltage (VDC)	Rectified Voltage (VAC)
560	3X400
680	3X480
330	3X230

The power dissipation in the chart includes the losses of the rectifying bridge.

The charts above are based upon theoretical worst-case conditions. Actual test results show 10% to 20% better power dissipation.

Chapter 9: Powering Up

After the Gold Tuba is connected to its device, it is ready to be powered up.

Caution:
Before applying power, ensure that the DC supply is within the specified range and that the proper plus-minus connections are in order.

9.1. Initializing the System

After the Gold Tuba has been connected and mounted, the system must be set up and initialized. This is accomplished using the *EAS II*, Elmo's Windows-based software application. Install the application and then perform setup and initialization according to the directions in the *EAS II User Manual*.

Chapter 10: Dimensions

This chapter provides detailed technical information regarding the Gold Tuba.

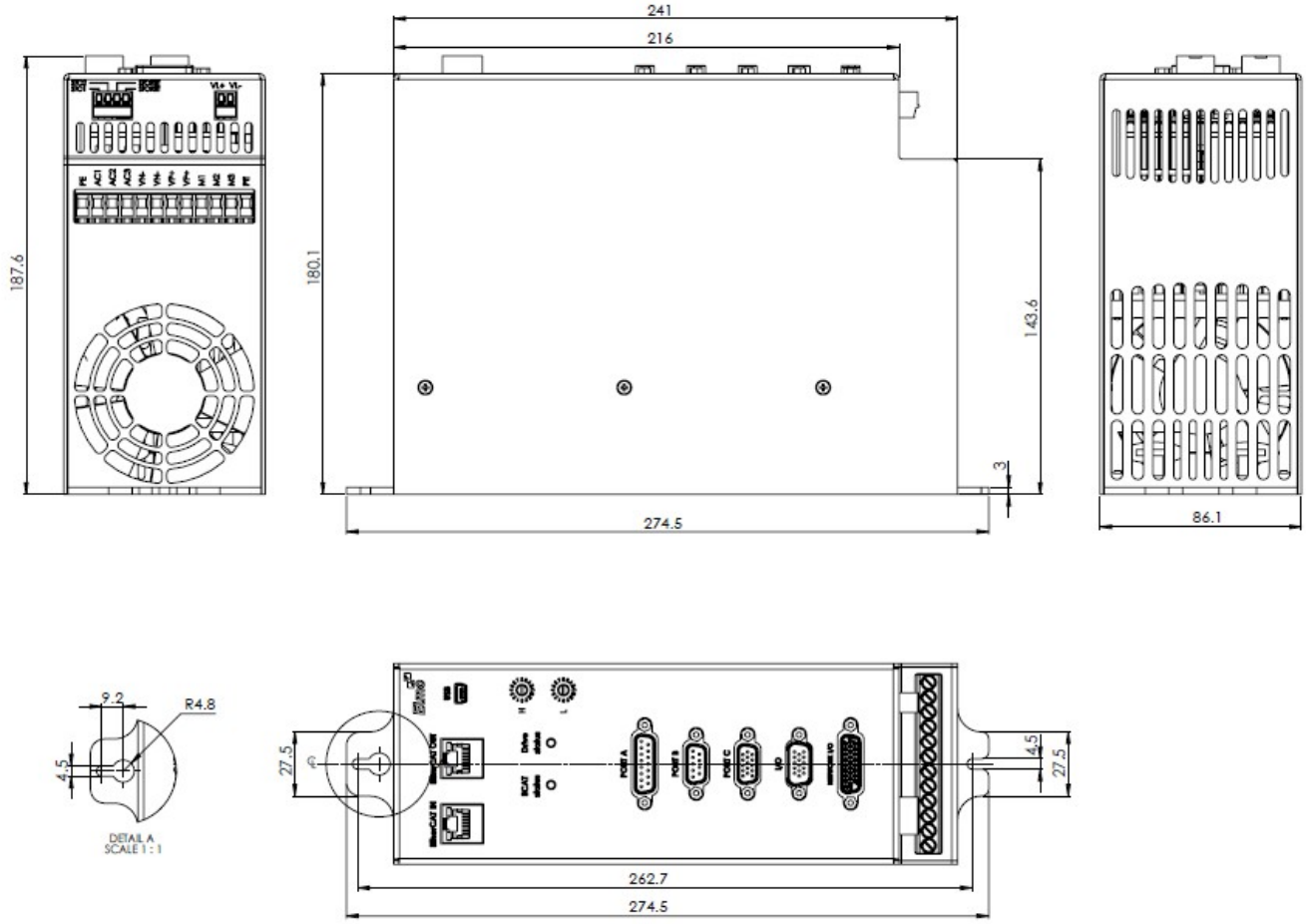

Inspiring Motion

Since 1988

For a list of Elmo's branches, and your local area office, refer to the Elmo site www.elmomc.com

Elmo
Motion Control