V2.0

PIN	FUNCTION	COLOR	WIRE GAGE
1	MOTOR U	YELLOW	16AWG
2	MOTOR V	RED	
3	MOTOR W	BLACK	
4	NC	NC	
5	NC	NC	
6	NC	NC	
⏚	MOTOR PE ⏚	YELLOW/GREEN	16AWG

M17 7PIN

Connector Detail (Power Wire)

PIN	FUNCTION	COLOR	WIRE GAGE	PIN	FUNCTION	COLOR	WIRE GAGE
1	DC +5V	RED	28AWG	10	/U	BROWN	28AWG
2	GND	BLACK		11	V	WHITE/BLACK	
3	A	BLUE/BLACK		12	/V	WHITE	
4	/A	BLUE		13	Shield	Shield	
5	B	GREEN		14	Z	YELLOW	
6	/B	GREEN/BLACK		15	/Z	YELLOW/BLACK	
7	KTY(+)	RED	26AWG	16	W	GRAY/BLACK	
8	KTY(−)	BLACK		17	/W	GRAY	
9	U	BROWN/BLACK	28AWG				

M17 17PIN

Connector Detail (Feedback Wire)

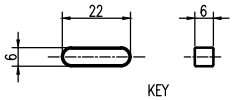

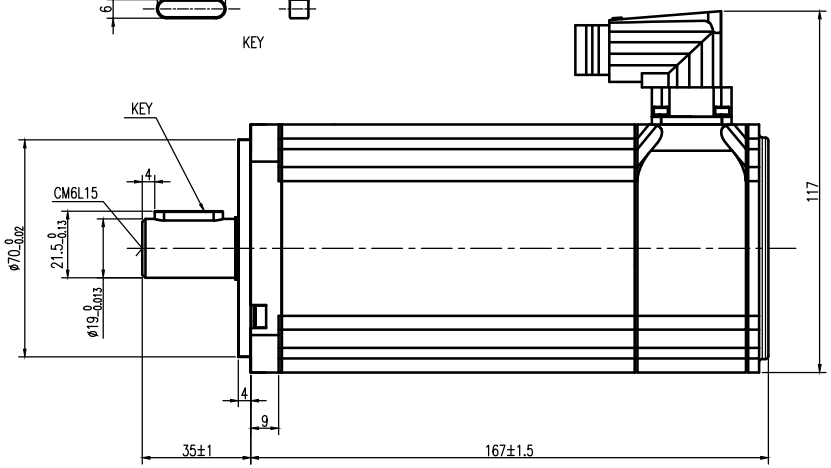

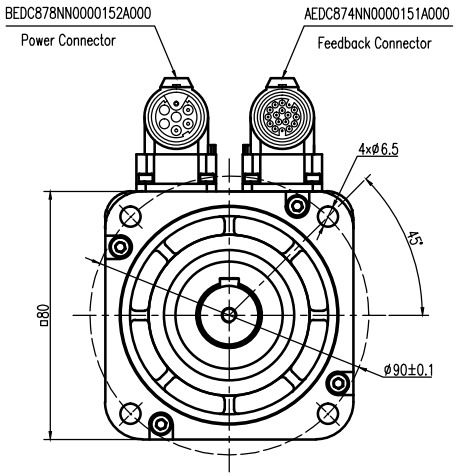

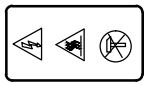

Elmo Motion Control

DC BRUSHLESS MOTOR

L80-1003026ENC

W	1000	V	300	
A	6.2	Nm	3.18	
RPM	3000	Ins F		IP65

MADE for Elmo by Kinavo CHINA

S/N: 307011268KYYDDDNNNN

E505281

V2.0

Performance Curve

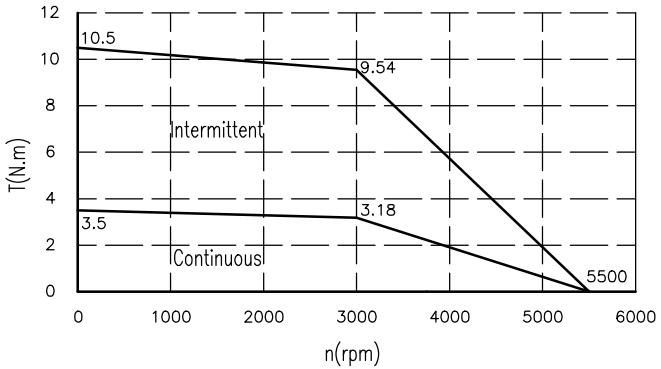

Tecnical Data		
No. of poles		6
DC Link Voltage U_{DC} (DC Link)		300
Rated Power P_N(W)		1000
Rated Torque T_N(N.m)		3.18
Rated Speed n_N(rpm)		3000
Rated Current I_N(A)		6.2
Maximum torque T_m(N.m)		9.54
Maximum Current I_m(A)		18.6
Standstill torque T_S(N.m)		3.5
Standstill current I_S(A)		6.82
Resistance line−line R_L(Ω)		0.86
Inductance line−line L_L(mH)		4.5
Electrical time constant τ_e(ms)		5.23
Mechanical time constant τ_m(ms)		0.86
Voltage constant K_e(V/krpm)		34
Torque constant K_t(Nm/A)		0.562
Rotor moment of inertia Jm (Kg.cm^2)		1.85
Max. voltage rising du/dt(KV/μs)		8
Insulation class		F
Max. radial force Fr(N)		335
Max. axial force Fa(N)		167.5
Weight(Kg)		3.9
Feed back device		2500p/rev incremental encoder
		TS6014N115
Temperature sensor		KTY84−130
Cooling method		Totally enclosed non−ventilated
protection level		IP65,shaft sealing IP54
Evironmental conditions	Temperature	−20℃~40℃
	Humidity	Below 90%RH (No dewing)
	Environment	Far away active gas,combustible gas,oil drop,ash.
	Installation altitude	UP TO 1000m:rated power, above 1000m:1.5% power decreasing per 100m,max.4000m
Rating conditions	Mounting	Aluminum flange 255x255x6mm
	Temperature	60K housing temperature ring at 40℃ ambient

REV	Description of Change
V2.0	Change in DC bus voltage Add the wires gage for all wires Add the cable diameter to all cables Add the sign of CE Add the sign of aganist knock lable

REV	ECN NO.	DRN	APP'D	DATE

UNLESS OTHERWISE SPECIFIED TOLERANCES:

DECIMALS: .x ±0.5 .xx ±0.25 .xxx ±0.1

ANGULAR: ±0°30'

UNIT: mm

DO NOT SCALE DRAWING

MATERIAL

CONTR.

FIRST ANGLE PROJECTION

DESIGN	YJL	2019.1.30
CHECK	ZZB	2019.1.30
APPD	SL	2019.1.30
SCALE		
SHEET	OF	

P/N. 307011268SS

TITLE Outside Drawing

USED ON L80-1003026ENC

DWG NO. REV V2.0

ELMO MOTOR

A